Installation & Maintenance Manual

115 V / 60 Hz

SUITMATE®
SWIMSUIT WATER EXTRACTOR

TABLE OF CONTENTS

Introduction 2
Important Installation Options 2
Safety 2
SUITMATE® Installation Instructions 3
Wiring Diagram 6
Testing and Operation 7
Installation Troubleshooting 7
SUITMATE® Utilities Location Diagram 8
SUITMATE® Maintenance Instructions 9
SUITMATE® Troubleshooting Guide 11
Remove / Replace Mechanical Assemblies 14
Remove SUITMATE® from the Wall Mount Bracket 14
Reinstall SUITMATE® to the Wall Mount Bracket 14
Top and Sub Top Assemblies 15
Lid 19
Actuator Screw 19
Riser Cable Assembly 21
Drive Unit Assembly 23
Liner 25
Brake Rods, Basket, Hub, and Brake Disc Assembly 27
Brake Disc and Basket 29
Brake Lever Assembly 31
Shock Mounts 33
Shock Bumper Rings 35
Motor from Mounting Plate and Motor 39
Replace Electrical Assemblies 41
GFCI 41
Micro Switch 43
Timer 45
Timer Bypass 45
SUITMATE® Micro Switch Adjustment Procedure 47
SUITMATE® Exploded Drawing 48
SUITMATE® Assemblies Chart 49
SUITMATE® Parts and Assemblies List 50
SUITMATE® Maintenance Log 54

INTRODUCTION

The SUITMATE® unit is a high-speed swimsuit water extractor. It is powered by a 1/3 horsepower, 115 V, 60 Hz, 8.6 Amp fully grounded and fault protected electric motor. The SUITMATE® unit weighs approximately 55 pounds (25 kg), and measures 15 inches x 15 inches x 23 inches (38 cm x 38 cm x 58.4 cm).

This manual contains Installation Options, Safety Precautions, Installation Instructions, a Wiring Diagram, a Utilities Location Diagram, Maintenance Instructions, a Troubleshooting Guide, Instructions detailing the removal/replacement of mechanical or electrical assemblies, a Micro Switch Adjustment Procedure, plus an exploded drawing, a Parts List, and a sample Maintenance Log.

The SUITMATE® unit should only be worked on by a qualified mechanic, electrician, or maintenance individual.

All maintenance and troubleshooting procedures are located in the appropriate sections of this manual.

Follow the service procedures carefully. Always note the location and position of parts and wires before removing them so that reassembly can be done easily and correctly. If no specific reassembly instructions are given, simply reverse the disassembly procedure.

IMPORTANT INSTALLATION OPTIONS

Prior to installation of the SUITMATE® unit determine how the utilities will be connected.

1) Internal electrical and plumbing connection.

2) Internal electrical connection and external plumbing connection.

3) External electrical connection and internal plumbing connection.

4) External electrical and plumbing connection.

SAFETY

When servicing the SUITMATE® unit, observe the following safety precautions:

- Always turn off the power at the circuit breaker – place a lockout tag on the circuit breaker panel indicating that the breaker is not to be turned on except by authorized personnel and disconnect the unit before doing any work on the SUITMATE® unit. Simply turning off a switch is NOT enough.
- Use only proper tools, test equipment, and work practices when servicing the SUITMATE® unit. If there are any questions concerning proper tools, equipment or practices, please contact the factory for recommendations at: (Toll Free) 800-553-3353, (Telephone) 847-742-3532, or (E-Mail) info@suitmate.com.
- Due to critical tolerances, use only specified replacement parts. See the SUITMATE® UNIT PARTS AND ASSEMBLIES LIST on page 50 of this manual.

INSTALLATION INSTRUCTIONS

115 V, 60 Hz, 8.6 Amp SUITMATE® Unit

The SUITMATE® Swimsuit Water Extractor has been designed and manufactured with safety as the primary consideration. Therefore, it is important that the unit be installed correctly. It is also important that the installation comply with all local building codes and regulations. Please consult your local licensed plumbing and electrical engineers or contractors about your installation. Read the entire INSTALLATION INSTRUCTIONS before beginning your installation. Remember: DO IT RIGHT and DO IT SAFE!

PROPER LOCATION FOR THE SUITMATE® UNIT

Following is a list of factors to consider in determining a location for the SUITMATE® unit.

1) The unit should be located in an area that is near where people remove and rinse out their swimsuits.
2) The unit should NOT be located in a cluttered area or where it is exposed to direct shower water or water hose down.
3) The unit should be mounted on a wall structure that will support the unit's approximate 55 pounds (25 kg) hanging weight plus the added weight or pressure of people leaning on the unit. Consult the PROPER WALL MOUNTING section of these instructions to determine an appropriate location.
4) There should be a means to dispose of the wastewater from the unit. Consult the PROPER DRAINAGE section of these instructions (page 5) to determine an appropriate location.
5) The unit should be wired to a 115 V, 60 Hz, 20 Amp dedicated circuit. Consult the PROPER ELECTRICAL CONNECTIONS section of these instructions (page 5) to determine proper location.

PROPER WALL MOUNTING OF THE SUITMATE® UNIT

The SUITMATE® unit should be mounted to the wall with the Wall Mount Bracket that is provided with the unit. The UTILITIES LOCATION DIAGRAM (page 8) shows the recommended location for the mounting holes, the electrical service, and the wastewater outlet (if utilized). The Wall Mount Bracket must be secured to a wall stud, or to concrete block or cinder block wall.

WARNING! ***Anchors in drywall are not sufficient to mount the SUITMATE® unit.***

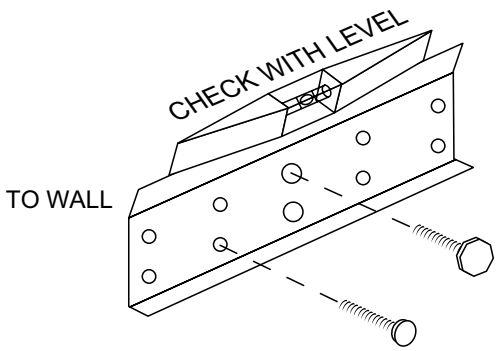

USE APPROPRIATE FASTENERS FOR YOUR APPLICATION

Locating and Securing the Wall Mount Bracket to the Wall

The suggested height from the floor to the top of the SUITMATE® unit is 42 inches (107 cm). At least an additional 10 inches (25.5 cm) of clearance above the SUITMATE® unit is needed for the opening and closing of the lid. The upper center hole of the Wall Mount Bracket should be 38 +/- 1/16 inches (96.5 cm +/- 2 mm) from the floor. The top of the Wall Sign should be 60 +/- 1/16 inches (152.5 cm +/- 2 mm) above the floor and centered over the SUITMATE® unit. Determine a location on the wall that provides adequate clearance, a strong and secure place for the Wall Mount Bracket as well as easy access to electrical and drainage connections.

WARNING! ***The Wall Mount Bracket must be level after it is secured to the wall.***

To secure the Wall Mount Bracket, center the bracket at the desired location and mark the locations of the two center holes. Secure the Wall Mount Bracket at the center holes using fasteners appropriate for your conditions. All fasteners must be capable of supporting 55 pounds (25 kg) in addition to the added weight or pressure of people leaning on the unit. Ensure the Wall Mount Bracket is level. Next secure the outer holes of the Wall Mount Bracket to the structure using fasteners appropriate to your conditions. After the bracket has been properly anchored to the wall and the electrical and drainage requirements have been allowed for, the SUITMATE® unit is ready to be mounted to the wall.

Mounting the SUITMATE® Unit to the Wall

Remove the SUITMATE® unit from its shipping box. Remove and discard the packaging material that is protecting the SUITMATE® unit, including the material protecting the SUITMATE® motor. The upper back lip of the SUITMATE® unit should be lowered down and centered on the Wall Mount Bracket. After the unit is centered, push down on the back of the unit to ensure that it is securely wedged onto the bracket and level. If it is not level, remove the unit, adjust the Wall Mount Bracket and re-hang the unit. A level installation is necessary to minimize vibration and ensure proper drainage of wastewater. Finish securing the unit to the wall using appropriate fasteners and anchors through the lower mounting channel at the bottom rear of the unit. This will prevent the unit from being lifted from the bracket or being moved.

Note: *Several holes in the lower mounting bracket may be obstructed by the GFCI Cover. Remove the GFCI cover to provide access to these holes.*

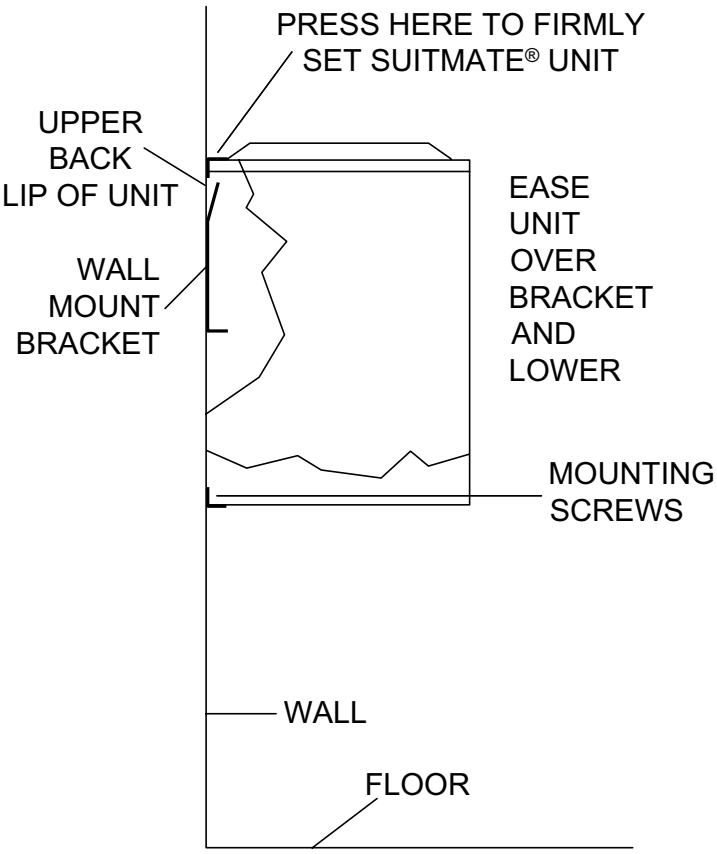

CUTAWAY VIEW OF SUITMATE® UNIT

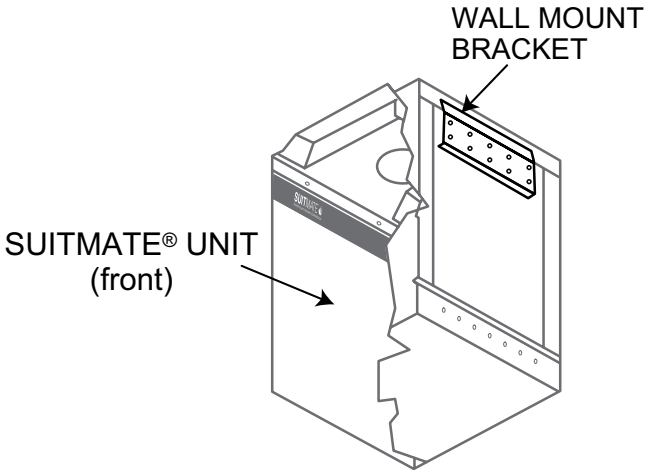

USE APPROPRIATE ANCHORS AND FASTENERS TO MOUNT THE UNIT FOR YOUR SPECIFIC INSTALLATION

PROPER DRAINAGE FOR THE SUITMATE® UNIT

Note: *Strictly follow all applicable local plumbing codes and regulations.*

TO A FLOOR DRAIN

Drainage of the wastewater to a floor drain should be done ONLY in an area where the floor is normally wet. DO NOT drain water across a floor where people do not expect to encounter a wet and slippery condition. The SUITMATE® unit comes with a short flexible drain tube connected with a stainless steel hose clamp to its drain tailpiece.

WARNING! ***The drain tube that comes with the unit must not be removed unless the unit is connected to an approved wastewater outlet or the factory supplied tube is replaced with another tube according to the following instructions.***

Replacing the Factory Drain Tube with a Longer Drain Tube

Use a 1-1/4 inch (31.75 mm) I.D. drain tube with a smooth interior that will not crimp or collapse. Use the stainless steel hose clamp that is provided with the factory flexible floor drain extension tube to secure the replacement tube to the unit's drain tailpiece. Ensure the replacement drain tube always slopes down, and secure it to the wall or floor with properly sized "U" clamps so it cannot be maneuvered to trap wastewater. Cut off the end of the drain tube on an angle to help prevent it from being blocked by the floor, wall, or some other object. Upon completion of the installation, check to make certain that there is a free flow of water from the drain tube.

TO AN APPROVED SANITARY WASTE LINE

This installation should only be done in accordance with all applicable local plumbing codes and regulations. The unit's 1-1/4 inch (31.75 mm) O.D. drain tailpiece is designed for connection with standard compression type plumbing fittings. There is room inside of the stainless steel housing for the use of a standard "P" type plumbing connection. The waste outlet should be located in the wall behind the unit. The UTILITIES LOCATION DIAGRAM (page 8) shows the appropriate location for the waste duct.

PROPER ELECTRICAL CONNECTIONS FOR THE SUITMATE® UNIT

Note: *Strictly follow all applicable local electrical codes and regulations.*

The SUITMATE® unit is equipped with a ground fault circuit interrupter (GFCI), that is designed to be connected to a 115 V, 60 Hz, 20 Amp dedicated circuit that is protected by a fuse or circuit breaker of the correct (20 Amp Maximum) size. A PLUG-IN INSTALLATION IS NOT ACCEPTABLE! The utilized circuit must be run to the SUITMATE® unit's weatherproof Junction Box that contains the GFCI. A liquid tight raceway/ flexible conduit should be used from the circuit connection to the GFCI Junction Box. The UTILITIES LOCATION DIAGRAM (page 8) shows the location of the suggested area behind the unit for the entrance of the electrical raceway/flexible conduit that does not interfere with the drainage connection.

WARNING! ***Do not route the raceway/conduit where wastewater can flow or drip on it.***

Remove the cover of the weatherproof Junction Box, which contains the GFCI, and remove the GFCI mounting screws. The circuit ground conductor must be connected to the green grounding screw located on the GFCI. If no ground is available on the circuit utilized, you must provide a proper ground for the SUITMATE® unit. The hot and neutral leads of the power circuit should be connected to the GFCI screw terminals marked "LINE". Connect the hot lead to the terminal marked "HOT WIRE" and the neutral lead to the terminal marked "WHITE WIRE". After the correct electrical connections have been properly made, remount the GFCI using the screws previously removed. Reinstall the weatherproof Junction Box cover previously removed. This cover provides access to the GFCI "TEST" and "RESET" buttons.

SUITMATE® WIRING DIAGRAM

115 V, 60 Hz, 8.6 Amp SUITMATE® Unit

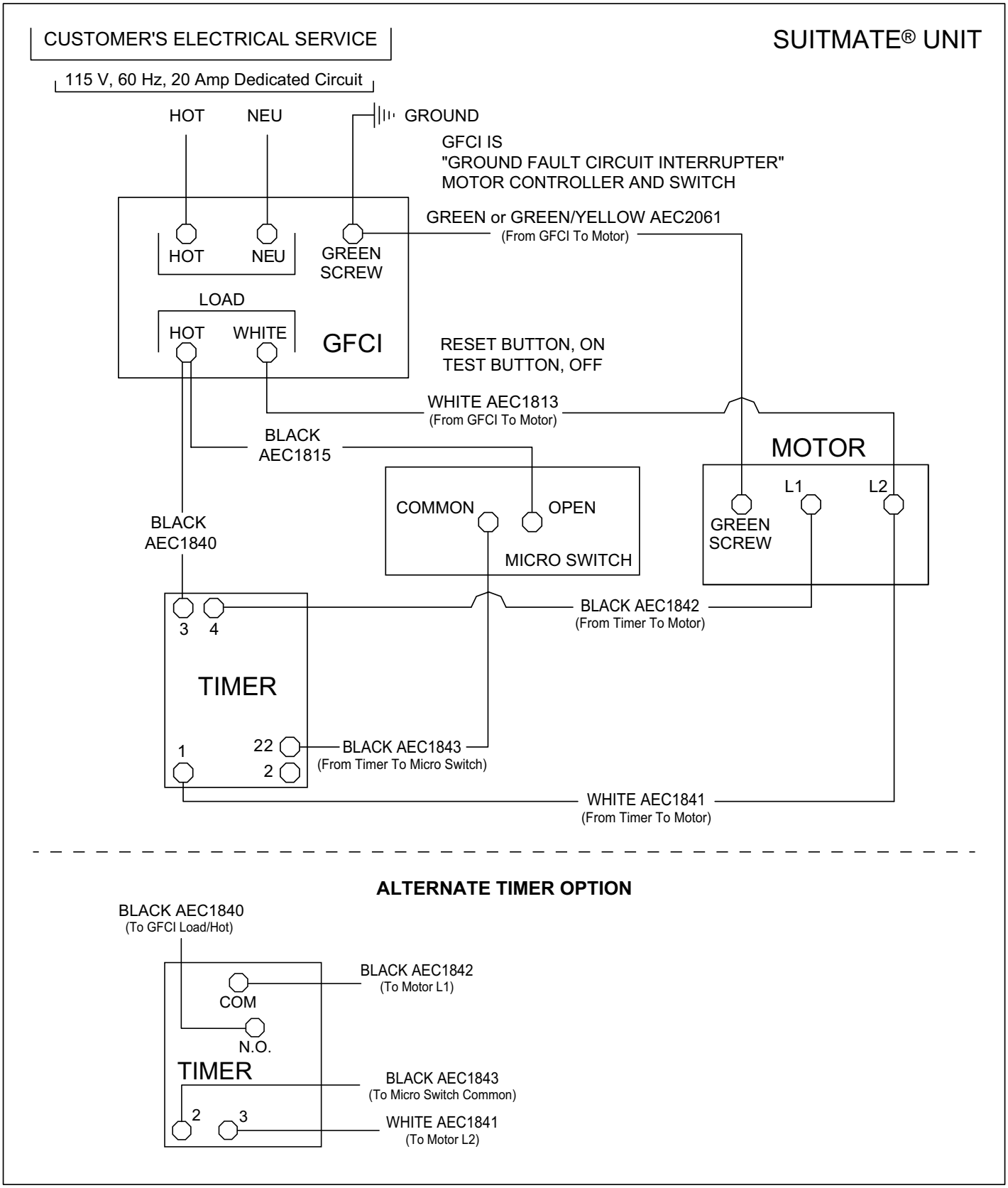

POSTING THE WALL SIGN

Locate the top edge of the sign 60+/- 1/16 inches (152.5 cm +/- 2 mm) above the floor centered over the SUITMATE® unit. At this height the sign will not be blocked when the lid is raised.

The sign has an adhesive foam backing. Be certain the surface that the sign is to be mounted to is clean and dry. Without touching the sign to the wall, align the top of the sign 60+/- 1/16 inches (152.5 cm +/- 2 mm) above the floor and at the center of the unit. Press the sign to the wall and rub firmly over the adhesive portion of the sign.

TESTING AND OPERATION

After the mounting and all connections are complete, test the SUITMATE® unit as follows:

1) Ensure all packaging material is removed from the unit including material around the Motor.
2) Check to see that the Basket is empty and that the Lid moves freely.
3) Press down on the Lid. The unit will start and run for 8 seconds. While the unit is running it should run smoothly and there should be no excessive vibration or noise.
4) Releasing the lid prior to the completion of the 8 second cycle will cause the Basket to stop within one (1) second.
5) Test the SUITMATE® unit by putting a wet swimsuit in the unit according to the instructions on the underside of the Lid. If there is excessive vibration or noise it is usually caused by the improper loading of the swimsuit. Be certain that the swimsuit is pushed to the bottom of the Basket and that all material is at least two inches below the top of the Basket.

INSTALLATION TROUBLESHOOTING

If the SUITMATE® unit does not operate, check the following:

1) Check to see if there is power going to the unit. Check the circuit using an A.C. voltmeter set to the appropriate range; measure across the “LINE” side of the GFCI.
2) Ensure that the GFCI switch is in the “ON” position. The “RESET” button should be depressed and a small green light should be illuminated.
3) Check to see if there is power from the unit. Check the unit using an A.C. voltmeter to measure across the “LOAD” side of the GFCI.
4) Check the TROUBLESHOOTING GUIDE (page 11) in this manual for additional troubleshooting assistance.

FINISHING THE INSTALLATION

Be certain to save this SUITMATE® UNIT MANUAL for future reference. If you have any concerns about the correct installation of the SUITMATE® unit, please contact Extractor Corporation at: (Toll Free) 800-553-3353, (Telephone) 847-742-3532, or (E-Mail) info@suitmate.com.

UTILITIES LOCATION DIAGRAM

115 V, 60 Hz, 8.6 Amp SUITMATE® Unit

WARNING!

This diagram is for reference only! It is not to be used as the sole reference for installation of the SUITMATE® unit. The installation instructions beginning on page 3 must be followed explicitly!

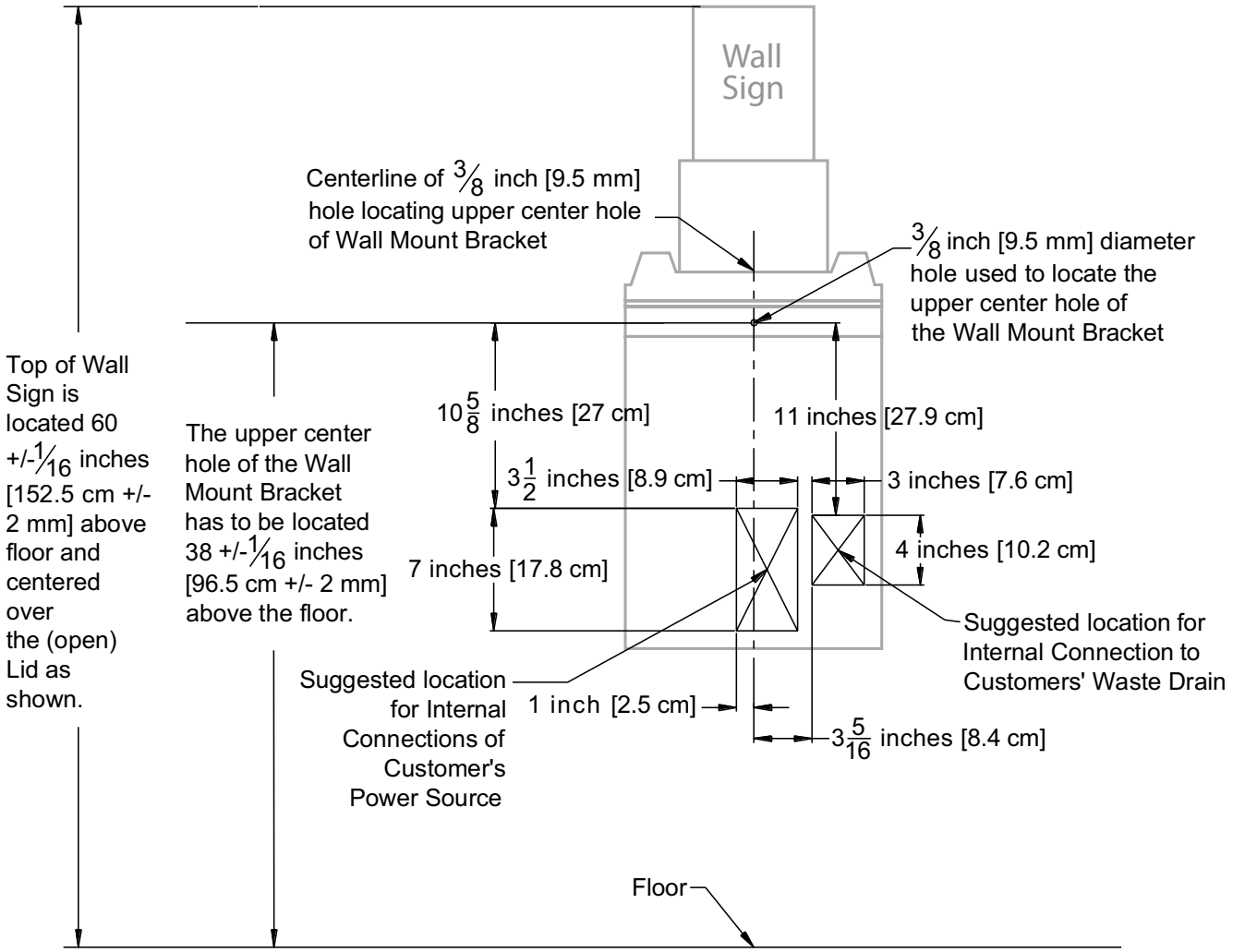

1) On wall locate center of 3/8 inches (9.5 mm) hole for the upper center hole of the Wall Mount Bracket.
2) Draw a vertical line (down) from this mark to indicate the center of the lower mounting channel of the SUITMATE® unit.
3) Use given measurements to locate either or both locations for placement of internal utilities.
4) After the SUITMATE® unit is hooked over the upper bracket, move it side to side so the center hole in the bottom channel is over the vertical line drawn in Step 2.

MAINTENANCE INSTRUCTIONS

115 V, 60 Hz, 8.6 Amp SUITMATE® Unit

These recommendations are designed to keep your SUITMATE® unit clean and operating properly. Extractor Corporation recommends that these procedures be followed at the suggested frequencies.

TWICE DAILY

1) Wipe down

Use a disinfectant wipe, such as the PDI Sani-cloth® to wipe down the inside of the Basket and the Black Plastic Top. Re-wipe the surfaces with a fresh towel and clean water.

DAILY

1) Inspection

a. Open the Lid, pull the Basket to the side and with a flashlight, check for trapped debris such as straps, strings, bathing caps, etc. inside of the unit. If foreign objects and/or debris are found, remove them with a long hook or other implement.

b. Should the Basket “flop” to one side during this inspection, you may have a broken shock mount in which you can contact Extractor Corporation for further assistance.

c. Press down on the Lid and run the machine to ensure that it is operating properly. When you lift the Lid, the Basket should stop spinning within one (1) second.

2) Hygienic Cleaning

a. Mix a disinfecting concentrate at the manufacturer’s recommended strength in a ½ gallon bucket of water.

Note: *Highly concentrated chemicals can cause damage to certain components within the unit.*

b. Clean the inside of the unit by spinning a small soft towel soaked in the cleaner. Repeat this step 3 times.

c. The spun towel can then be used to wipe down the Basket and the Black Plastic Top.

d. Re-wipe the surfaces with a fresh towel and clean water.

WARNING!

Never use flammable solvents in or on the SUITMATE® unit.
When cleaning around the unit, be careful not to allow water to splash up under the unit as this may damage the motor.

WEEKLY

1) Flushing

a. If your unit uses a drain house or a P-trap, disconnect it from the unit’s drain tailpiece and inspect it for any obstructions.

b. With the drain hose or P-trap removed, place an empty bucket (1-2 gallons) under the tailpiece to catch the discharge from the flush.

c. Mix a disinfecting cleaner by referring back to steps A and B under Hygienic Cleaning.

d. SLOWLY pour the cleaner into the top opening of the unit. If the unit’s drainage channels are open, the full amount of cleaner solution poured into the unit should flow into the bucket below within a few seconds. Check the discharge water for signs of debris.

Note: *If cleaner is poured in too fast it may overflow the drain channel into the Motor.*

e. Repeat step D using clean water until a free flow of water is established and the discharge water is clear of debris.

f. If you cannot establish a free flow of water or the discharge water is spilling out from under the unit, the tailpiece is plugged or the drain channels are blocked. Locate the blockage by referring back to step A under Inspection. After removing the blockage, repeat steps C through E.

g. Reinstall the drain hose or P-trap.

MONTHLY

1) Care of Stainless Steel and Black Plastic

a. Wipe down the Black Plastic Top with Armor All® or its equivalent.

b. Clean and polish the stainless steel Case and Lid using the following procedure:

1. Dirt and grease can be removed with water and a soft cloth. Be sure to fully dry the steel after rinsing.
2. For stubborn dirt, use a soft cloth or a soft, non-metal bristle brush to rub in the direction of the polish lines or “grain” of the stainless steel. Rinse with clean water and fully dry the steel.

   Note: *Do not use abrasive or acidic cleaners and do not use steel wool or steel brushes as they can damage the steel.*
3. Sterilizing solutions can be utilized on the stainless steel as long as they are not left on for prolonged periods of time.
4. Finish by polishing the Case and Lid with a stainless steel protector.

2) Check the Braking System

a. Test the braking system by holding down the lid for 8 seconds, opening the lid, and then timing how long it takes for the basket to come to a full and complete stop. If the basket takes longer that 2 seconds to stop, please take the unit out of service and contact Extractor Corporation for further assistance.

Note: *Never put your hand into the basket before it has stopped rotating.*

3) Test the GFCI

a. Locate the weatherproof junction box in the bottom rear of the unit. Flip open the cover of the junction box to expose the “TEST” and “RESET” buttons on the face of the GFCI.

b. Test the GFCI by depressing the “TEST” button; the “RESET” button should pop out. Depress the “RESET” button to resume normal functioning. If the “RESET” button does not pop out during testing or is unable to be depressed back into place, the GFCI may be faulty; please contact Extractor Corporation for further assistance.

If the unit does not operate, please refer to the TROUBLESHOOTING GUIDE. If you have any questions or problems, please contact Extractor Corporation at: (Toll Free) 800-553-3353, (Telephone) 847-742-3532, or (E-mail) info@suitmate.com.

TROUBLESHOOTING GUIDE

115 V, 60 Hz, 8.6 Amp SUITMATE® Unit

If you are experiencing difficulty with your SUITMATE® unit, please read through the following pages to see if the problem you are experiencing is described. If so, please follow the troubleshooting steps to attempt to fix the problem. If further assistance is required, please contact the factory for further recommendations at: (Toll Free) 800-553-3353, (Telephone) 847-742-3532, or (E-mail) info@suitmate.com.

Problem: The unit is not working. There is no sound, no hum, and no noise at all when the lid is depressed.

- Is there power to the unit? An A.C. voltmeter set to the appropriate range can be used to check for power by measuring across the "LINE" side of the GFCI. The GFCI can be accessed from the bottom of the unit.
  - If there is no power, check the wire connections to the GFCI and check the power at the main circuit breaker
  - If there is power to the unit, check to see if the GFCI is tripped off. Attempt to reset the GFCI by pressing the "TEST" button followed by the "RESET" button.
    - If the GFCI cannot be reset, it may be faulty and in need of replacement.
    - If the GFCI resets and the unit still is not working, please proceed to the next troubleshooting steps.
- Can you hear the Micro Switch engaging (indicated by a faint clicking sound)? If not, the Micro Switch may be out of alignment and require adjustment. The Micro Switch is located on the backside of the unit. In order to access it, the unit will need to be removed from the wall.
  - On the backside of the unit, there is a stainless steel box. Remove the box cover. The Micro Switch is located on the right hand side of this box and has a small wire cable attached to a copper arm. Check if the Micro Switch is engaging properly by depressing the Lid while still maintaining visual contact with the Micro Switch.
    - Does the wire cable pull up on the arm of the Micro Switch? If the arm is moving but does not make an audible "click," the Micro Switch needs to be adjusted. Please refer to Page 49 in this manual for further instruction.
    - Does the wire cable not move at all? This could indicate a broken Actuator Screw. Please refer to Page 19 in this manual for further instruction.
- Is there power after the Timer? With the Lid depressed, use an A.C. voltmeter set to the appropriate range to check for power at the #4 (or COM) connection on the Timer.
  - If there is no power at that connection point, the Timer may be faulty and in need of replacement.
  - If the Timer is functioning properly, the power reading at the #4 (or COM) connection will last for approximately 7-8 seconds and then shut off.

Problem: The unit is humming when the Lid is depressed, but the Basket is not spinning.

CAUTION! ***Make certain the main electrical power to the unit is turned off – and locked out – before beginning work on the SUITMATE® unit.***

- Does the Basket spin freely? With the Lid in the open and upright position, use a piece of bar stock or a wood 2 x 4 to manually depress the two Brake Rods that come up through the Top on each side of the opening for the Basket. Simultaneously depress both Brake Rods approximately 1/2 inch (13 mm) and attempt to spin the Basket. With the Brake Rods depressed, it should take very minimal force to spin the Basket.

- If the Basket spins freely, the problem may be due to a loose wire or a broken motor component. Remove the end cap from the bottom of the motor to visually inspect the motor components for cracks, frayed wires and broken wires. If anything is found to be broken, contact Extractor Corporation for additional assistance or replacement parts.
- If the Basket does not spin freely or at all, the problem may be due to an obstruction within the unit or faulty motor bearings. Check for signs of an obstruction within the unit by gently pulling the Basket aside and, with a flash light, look down inside the unit for something wrapped around the Basket or Brake Disc (located around the bottom of the Basket). If foreign objects are found, try to pull them out with a long hook or other instrument. If the obstruction cannot be removed in this manner, the Top and Sub-Top may need to be removed to fully access the inside of the unit. Please refer to Page 15 in this manual for further instruction.
    - If no signs of an obstruction can be seen, the issue may be faulty motor bearings. Please contact Extractor Corporation for additional troubleshooting regarding this issue.

Problem: The unit is humming as soon as power is engaged and before the Lid is depressed.

This could be caused by either a faulty timer or an over-adjustment on the Micro Switch.

- To test for a faulty timer in this instance, place the Lid in the open and upright position and use an A.C. voltmeter set to the appropriate range to check for power at the #4 (or COM) connection on the Timer.
    - If there is power at the #4 (or COM) connection on the Timer with the Lid in the upright position, the Timer is faulty and should be replaced.
- To check the adjustment on the Micro Switch, please refer to Page 49 in this manual.

Problem: The unit is leaking.

The SUITMATE® unit does not have any seals or gaskets that can wear or break down. Leaking is primarily caused by an obstruction within the interior drain channel, drain hose, or P-trap (if applicable). The interior drain channel is a two-inch U channel that runs around the perimeter of the interior of the unit. Check for an obstruction by gently pulling the Basket aside and, with a flash light, look down inside the unit for something blocking the drain channel or drain opening. If foreign objects are found, try to pull them out with a long hook or other instrument. If the obstruction cannot be removed in this manner, the Top and Sub-Top may need to be removed to fully access the inside of the unit. Please refer to Page 15 in this manual for further instruction.

Problem: The GFCI is tripping off every time the unit is run.

CAUTION! ***Make certain the main electrical power to the unit is turned off – and locked out – before beginning work on the SUITMATE® unit.***

- The SUITMATE® unit should be connected to a 115 V, 60 Hz, 20 Amp dedicated circuit. If the unit is connected on a circuit with other items or appliances, it is possible that the initial draw of the unit could be overloading the circuit causing the GFCI to trip off. If the SUITMATE® unit is not on a dedicated circuit, switch it to a 115 V, 60 Hz, 20 Amp dedicated circuit and verify that the problem is resolved.
- If the SUITMATE® unit is already on a 115 V, 60 Hz, 20 Amp dedicated circuit, the GFCI may be faulty, have a loose connection, or there may be a short within the unit.
    - Verify that all wires are securely connected on both the “LINE” and “LOAD” sides of the GFCI. If a loose connection is found, correct it, restore power and verify that the problem is resolved.

• If a loose connection is not found or the GFCI still trips off, turn off the main electrical power to the unit and bypass the GFCI. Connect the unit direct to a ground wall circuit and see if the main circuit breaker trips off. If the main circuit breaker does not trip, the GFCI is most likely faulty and should be replaced. If the main circuit breaker does trip, there is probably a short within the unit. Please call Extractor Corporation for additional troubleshooting assistance.

Problem: The GFCI is tripping off at random times, no specific pattern or reason.

CAUTION! ***Make certain the main electrical power to the unit is turned off – and locked out – before beginning work on the SUITMATE® unit.***

• The SUITMATE® unit should be connected to a 115 V, 60 Hz, 20 Amp dedicated circuit. If the unit is connected on a circuit with other items or appliances, it is possible that at the random time when the unit is running at the same time as another appliance on the circuit, the circuit could become over loaded and cause the GFCI to trip off. If the SUITMATE® unit is not on a dedicated circuit, switch it to a 115 V, 60 Hz, 20 Amp dedicated circuit and verify that the problem is resolved.

• If the SUITMATE® unit is already on a 115 V, 60 Hz, 20 Amp dedicated circuit, the GFCI may be faulty or have a loose connection.

• Verify that all wires are securely connected on both the “LINE” and “LOAD” sides of the GFCI. If a loose connection is found, correct it, restore power and verify that the problem is resolved.

Problem: The Basket is still spinning when you lift the Lid.

There is a problem with the Brakes. **Please take the unit out of service immediately** and contact Extractor Corporation.

Problem: The unit will run but takes a long time to reset before being able to run again.

This may indicate a faulty Timer, a faulty Motor Thermal Breaker, or an obstruction within the unit.

• To test for a faulty Timer, please follow the instructions on Page 47 for bypassing the timer. If the unit functions normally once the timer is bypassed, the timer should be replaced.

• If the unit takes more than 5 minutes to reset, there may be either an obstruction within the unit that is causing friction while the unit is running or a faulty Thermal Breaker.

• Check for signs of an obstruction within the unit by gently pulling the Basket aside and, with a flash light, look down inside the unit for something wrapped around the Basket or the Brake Disc (located around the bottom of the Basket). If foreign objects are found, try to pull them out with a long hook or other instrument. If the obstruction cannot be removed in this manner, the Top and Sub-Top may need to be removed to fully access the inside of the unit. Please refer to Page 15 in this manual for further instruction on removing these pieces.

• If no signs of an obstruction can ben seen, the issue could be a faulty Motor Thermal Breaker. Please contact Extractor Corporation for additional troubleshooting regarding this issue.

Problem: The unit is making excessive noise when it is running.

• The patrons may not be operating the unit correctly. Test this by putting a swimsuit in the Basket and pushing it all the way down, making sure that it is evenly distributed in the bottom of the unit. Operate the unit.

• If the unit is still noisy under correct operation, attempt to run it empty. If the noise remains even with the unit being empty, it could indicate faulty motor bearings or worn out brakes. Please contact Extractor Corporation for additional information.

If the above steps and suggestions have not resolved your problem, please contact Extractor Corporation at: (Toll Free) 800-553-3353, (Telephone) 847-742-3532, or (E-mail) info@suitmate.com.

MECHANICAL ASSEMBLIES

115 V, 60 Hz, 8.6 Amp SUITMATE® Unit

GENERAL

Always turn off the power at the circuit breaker – place a lockout tag on the circuit breaker panel indicating that the breaker is not to be turned on except by authorized personnel – and disconnect the electrical connections before doing any work on the SUITMATE® unit. Simply turning off a switch is NOT enough. Use only proper tools, test equipment, and work practices when servicing the SUITMATE® unit.

If there are questions concerning proper tools, equipment or practices, please call the factory for recommendations at: (Toll Free) 800-553-3353, (Telephone) 847-742-3532, or (Email) info@suitmate.com.

Due to critical tolerances, use only specified replacement parts. See the SUITMATE® UNIT PARTS AND ASSEMBLIES LIST on page 50 of this manual.

Some disassembly and assembly procedures have not been included, as the procedures seem to be self-evident.

REMOVE SUITMATE® UNIT FROM THE WALL MOUNT BRACKET

***Do This FIRST** prior to performing any electrical or mechanical maintenance.*

- Turn off the main electrical power to the unit – place a lockout tag on the circuit breaker panel indicating that the breaker is not to be turned on except by authorized personnel – and disconnect the unit before doing any work on the SUITMATE® unit. Simply turning off a switch is NOT enough.
- Consult the individual sections in this manual to determine the exact parts and fasteners that will be required for installation of mechanical components.

CAUTION! ***Make certain the main electrical power to the unit is turned off – and locked out – before beginning work on the SUITMATE® unit.***

EXTERNAL ELECTRICAL SERVICE

If the unit's electrical service is coming into the unit from outside the unit, it will be necessary to disconnect the incoming electrical service from the power source. Prior to disconnecting the electrical service make certain that the power source is turned off and locked out! Disconnect the incoming liquid tight raceway or cable from the power source.

EXTERNAL PLUMBING SERVICE

If the unit's plumbing service uses the factory supplied Drain Hose or is connected from outside the unit, it will be necessary to disconnect the drain hose or piping from its external hookup.

INTERNAL ELECTRICAL AND PLUMBING SERVICE

If the SUITMATE® unit was installed with internally connected plumbing and electrical connections:

1) Remove the cover of the weatherproof Junction Box that contains the GFCI; remove the GFCI; disconnect the external source ground wire and the power feed lines from the GFCI terminals marked "LINE". Retain the weatherproof Junction Box cover and fasteners for reinstallation.
2) Disconnect the power feed liquid tight raceway or cable from the Junction Box and the internally connected drain hose.
3) Remove the lower fasteners anchoring the unit to the wall.
4) Remove the SUITMATE® unit from the Wall Mount Bracket by firmly grasping the sides of the Case bottom and gently lifting straight up until the unit clears the upper back lip of the Wall Mount Bracket. Take the SUITMATE® unit to a workbench.

REINSTALL THE SUITMATE® UNIT

CAUTION! ***Make certain the main electrical power to the unit is turned off – and locked out – before beginning work on the SUITMATE® unit.***

Return the SUITMATE® unit to its proper location and reconnect the unit by reversing the procedures above.

Note: *Make certain the unit is level. If it is not level, remove the unit, adjust the Wall Mount Bracket and re-hang the unit. A level installation is necessary to minimize vibration and insure proper drainage of wastewater.*

REMOVE THE TOP AND SUB-TOP ASSEMBLIES

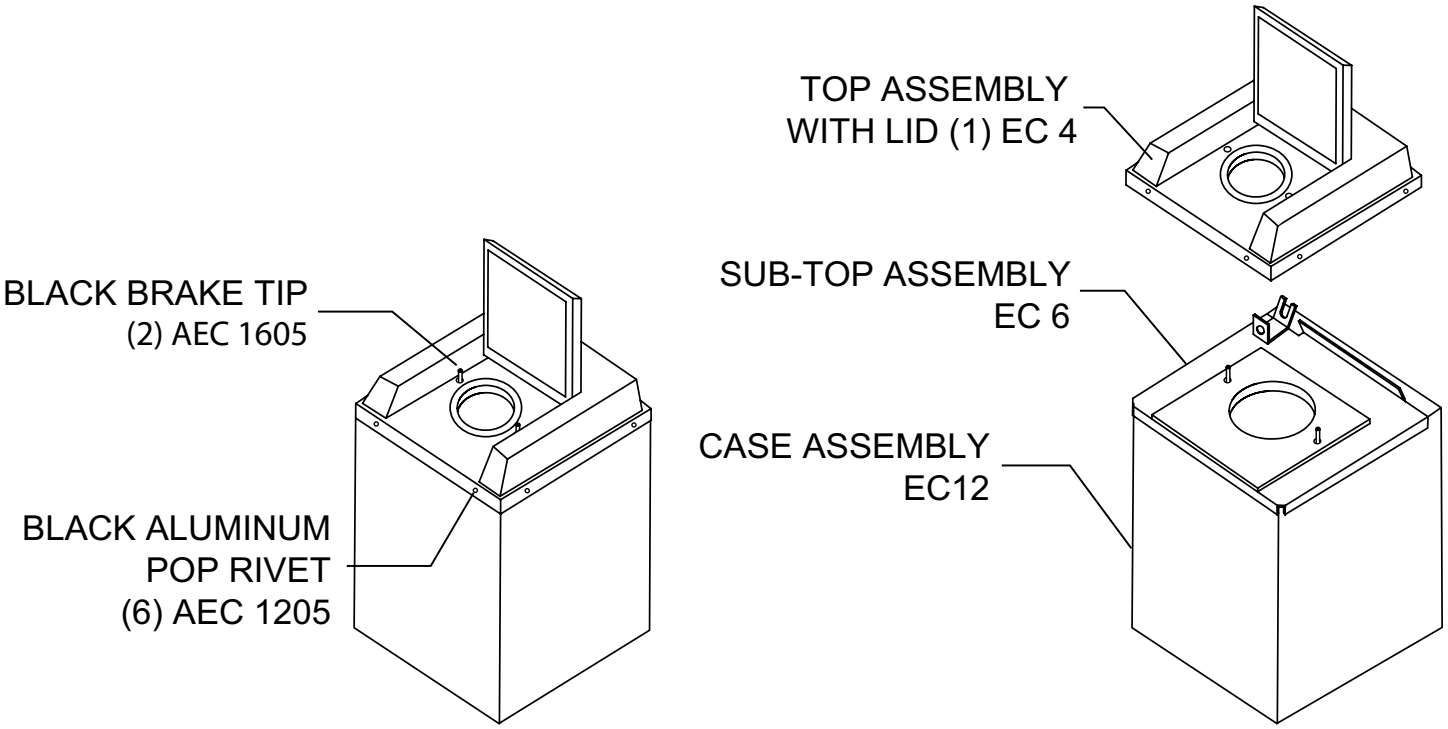

Do This FIRST

Make certain you have all the correct parts and fasteners necessary for correct installation. Re-use any components that are not damaged, otherwise replace them. Parts used in this process: (6) AEC1205 Black Aluminum Pop Rivets, (2) AEC1605 Black Rubber Brake Tips, and (3) AEC1240 Aluminum Pop Rivets.

REMOVE TOP ASSEMBLY

1) Remove the SUITMATE® unit from the Wall Mount Bracket following the instructions beginning on Page 14.
2) Place the SUITMATE® unit in an upright position.
3) Lift the Lid. Remove the Black Rubber Brake Tips from the (2) Brake Rods. If damaged, they must be replaced.
4) Remove the (6) rivets from around the outer edge of the Black Plastic Top.
   a. Drill out each rivet with a #11 (0.191 inch) drill bit.

      Note: *Make certain the drill bit does not reach a depth of more than ½ inch to avoid damaging the Black Plastic Liner.*

   b. Gently chisel off the rivet heads. Make certain the rivets are completely removed.
5) Separate the Black Plastic Top from the unit. Remove the Top by grasping the sides and lifting straight up while the Lid is in the upright position.
6) Be careful not to bump the Riser Cable Assembly on the Sub-Top. Set the Top Assembly aside for reassembly.

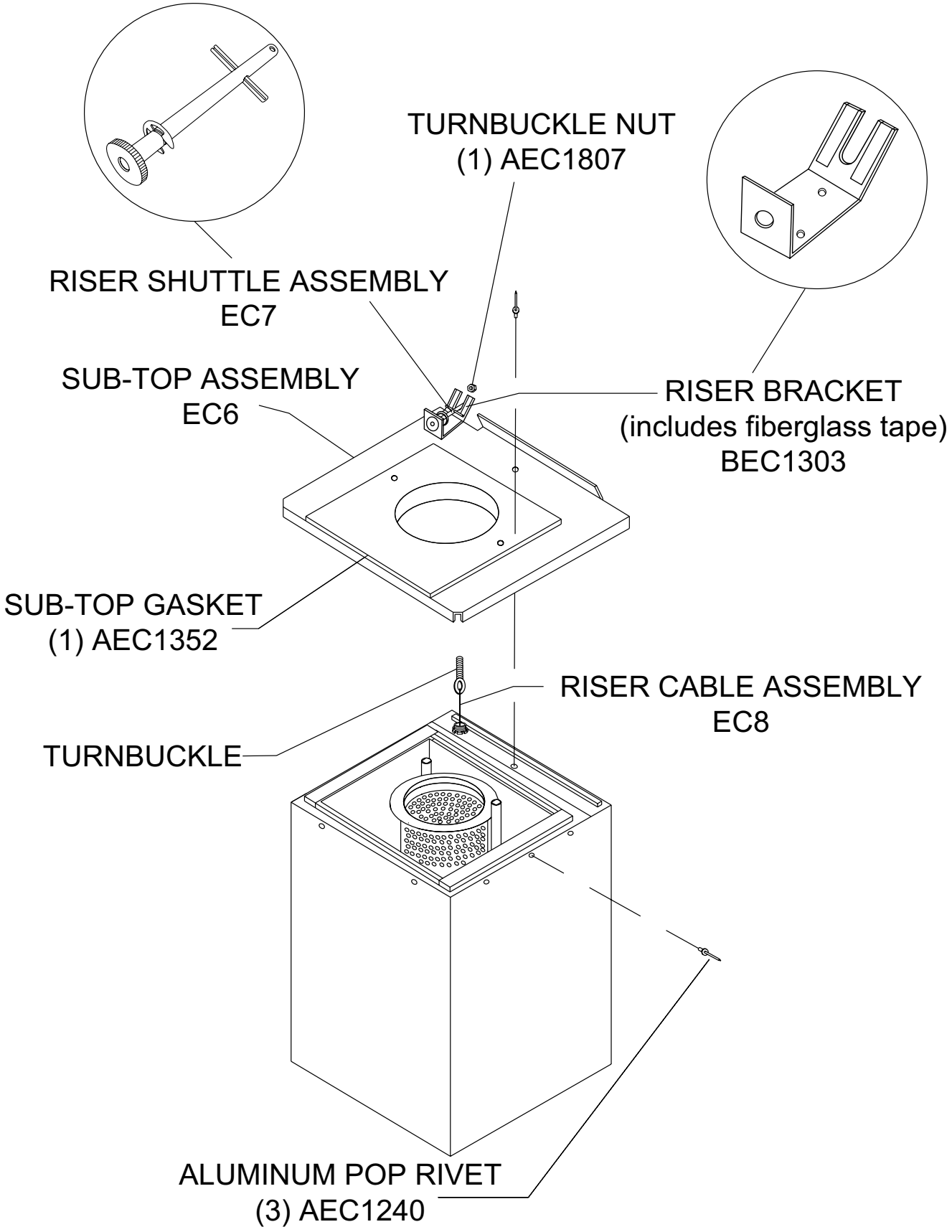
TURNBUCKLE NUT
(1) AEC1807
RISER SHUTTLE ASSEMBLY
EC7
SUB-TOP ASSEMBLY
EC6
RISER BRACKET
(includes fiberglass tape)
BEC1303
SUB-TOP GASKET
(1) AEC1352
RISER CABLE ASSEMBLY
EC8
TURNBUCKLE
ALUMINUM POP RIVET
(3) AEC1240

REMOVE SUB-TOP ASSEMBLY

1) Remove the Nut from the Turnbuckle that is attached to the Riser Cable. Set the Nut aside for reassembly.
2) Pull the Riser Cable with Turnbuckle down through the hole in the Riser Shuttle.
3) Remove the (2) rivets from around the outer edge of the Sub-Top and the (1) rivet from the top.
   a. Drill out each rivet with a #11 (0.191 inch) drill bit.

      Note: *Make certain the drill bit does not reach a depth of more than ½ inch to avoid damaging the Black Plastic Liner.*

   b. Gently chisel off the rivet heads. Make certain the rivets are completely removed.
4) Separate the Sub-Top from the SUITMATE® unit. Remove the Sub-Top by grasping the sides and lifting straight up.
5) Remove rivet debris and any other foreign objects from the Liner.

REPLACE SUB-TOP ASSEMBLY

1) Place the SUITMATE® unit in an upright position.
2) Locate the (2) Brake Rod holes in the Sub-Top gasket and align them with the Brake Rods.
3) Push the Sub-Top down over the Brake Rods.
4) Push the Riser Cable Turnbuckle up and through the hole in the Riser Shuttle.
5) Reattach the Nut (removed in step 1 above) to the Turnbuckle that is attached to the Riser Cable.
6) Align the (3) holes in the Sub-Top (one on each side and one on the top) with the respective holes in the Case.

   Note: *Make sure that the lip of the Sub-Top is on the outside of the Case.*

7) Fasten the Sub-Top to the case with (3) Aluminum Pop Rivets.

REPLACE TOP ASSEMBLY

1) Place the SUITMATE® unit in an upright position.
2) Lift the Lid on the Top Assembly and locate the (2) Brake Rod holes in the Top and align them with the Brake Rods. Push the Top down over the Brake Rods.
3) Align the (6) holes in the outer edge of the Top with the corresponding (6) holes in the Case.
4) Fasten the Top to the Case with (6) Black Aluminum Pop Rivets.
5) Replace the (2) Black Rubber Brake Tips.

   Note: *Check the Micro Switch alignment by following the MICRO SWITCH ADJUSTMENT PROCEDURE section (Page 47) in this manual.*

6) Reattach the SUITMATE® unit to the Wall Mount Bracket. See instructions beginning on Page 14.
7) Retest the SUITMATE® unit for proper operation, refer to TESTING AND OPERATION on page 7.

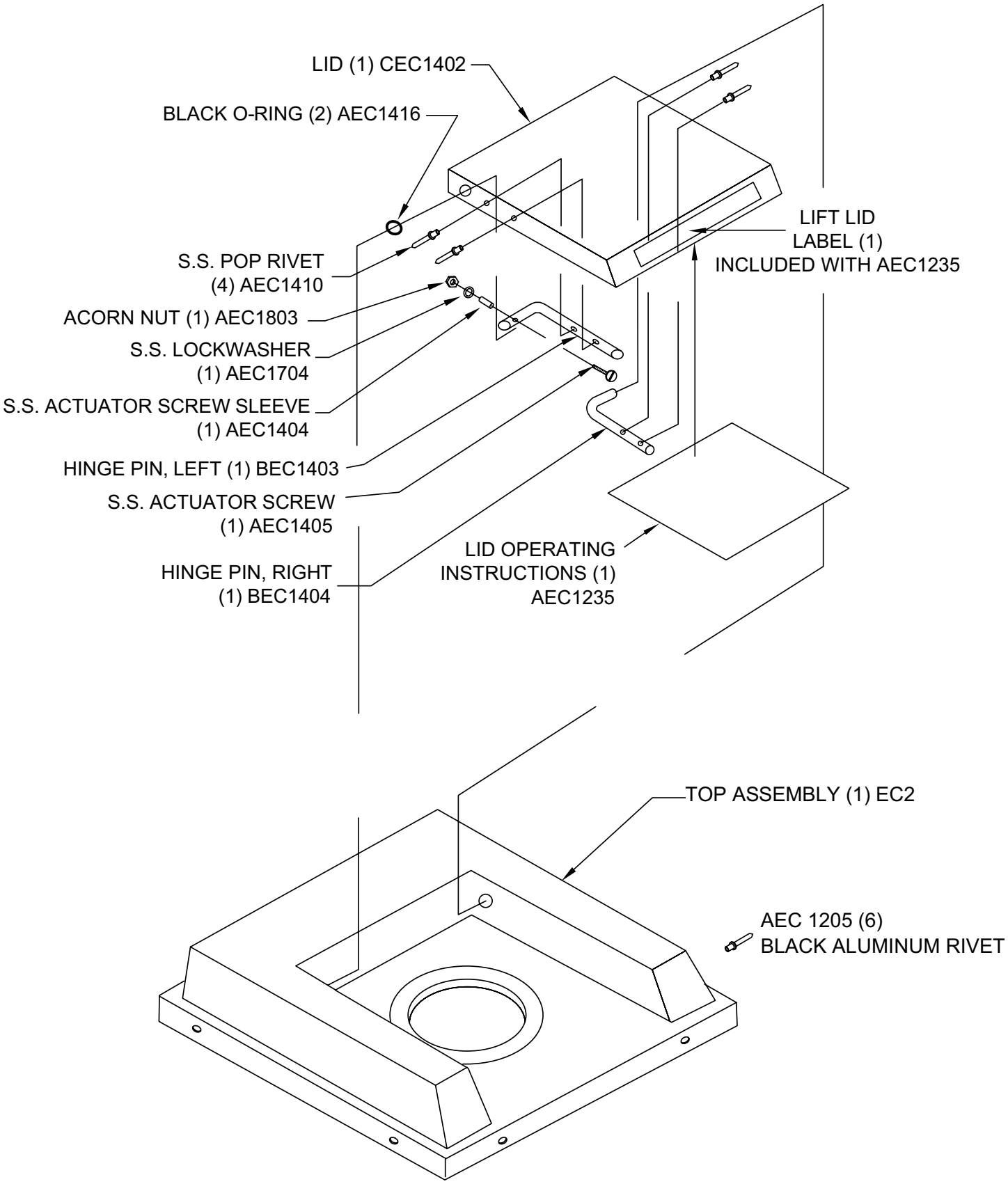
LID (1) CEC1402
BLACK O-RING (2) AEC1416
LIFT LID
LABEL (1)
INCLUDED WITH AEC1235
S.S. POP RIVET
(4) AEC1410
ACORN NUT (1) AEC1803
S.S. LOCKWASHER
(1) AEC1704
S.S. ACTUATOR SCREW SLEEVE
(1) AEC1404
HINGE PIN, LEFT (1) BEC1403
S.S. ACTUATOR SCREW
(1) AEC1405
HINGE PIN, RIGHT
(1) BEC1404
LID OPERATING
INSTRUCTIONS (1)
AEC1235
TOP ASSEMBLY (1) EC2
AEC 1205 (6)
BLACK ALUMINUM RIVET

REMOVE LID FROM BLACK PLASTIC TOP

Do This FIRST

Make certain you have all the correct parts and fasteners necessary for correct installation. Re-use any components that are not damaged, otherwise replace them. Parts used in this process: (2) AEC1410 S.S. Pop Rivets, (2) AEC1416 Black O-Rings, (1) AEC1704 S.S. Lock Washer, (1) BEC1403 Hinge Pin, Left, (1) AEC1405 Actuator Screw, (1) AEC1404 S. S. Actuator Sleeve, (1) BEC1404 Hinge Pin, Right, and (1) AEC 1803 Acorn Nut. Plus any components required to reinstall the Sub Top and Top Assemblies (Page 17).

REMOVE LID

1) Remove SUITMATE® unit from the Wall Mount Bracket. See instructions beginning on Page 14.
2) Remove Top and Sub-Top Assemblies. See instructions beginning on Page 15.
3) Place the Top Assembly upside down.
4) Remove the Acorn Nut, Lock Washer, and Actuator Sleeve from the Actuator Screw.
5) Unscrew the Actuator Screw from the Left Hinge Pin.
6) Remove the (2) rivets from the outer edge of the S.S. Lid that hold the Left Hinge Pin.
   a. Drill out each rivet with a 1/8 inch (0.125 inch) drill bit.
   b. Chisel off the rivet heads. Make certain the rivets are completely removed.
7) Remove the hinge pin through the metal Lid. Set the Left Hinge Pin aside for reassembly later.
8) Remove the Lid from the Top Assembly.

Note: *A rubber O-ring is located on each hinge between the metal Lid and the plastic Top.*

REPLACE LID

1) Insert the Right Hinge Pin into the Top and then insert the Left Hinge Pin through the Lid and into the Top.

Note: *Make certain that you have reinstalled the Rubber O-Ring on both hinge pins.*

2) Rivet the Left Hinge Pin to the Lid.

Note: *Be certain the Hinge Pin is flush against the inside of the Lid prior to riveting.*

3) Screw in the new Actuator Screw, re-install Actuator Sleeve, and fasten with Lock Washer and Acorn Nut. (See illustration below)

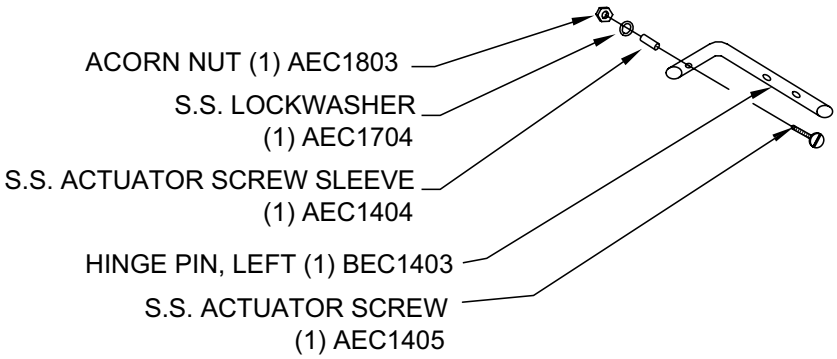

Note: *Make certain that with the lid open, the Actuator Screw does not touch the inside of the Black Plastic Top.*

4) Reinstall the Sub-Top and Top assemblies. See instructions beginning on Page 17.
5) Reattach the SUITMATE® unit to the Wall Mount Bracket. See instructions beginning on Page 14.
6) Retest the SUITMATE® unit for proper operation, refer to TESTING AND OPERATION on page 7.

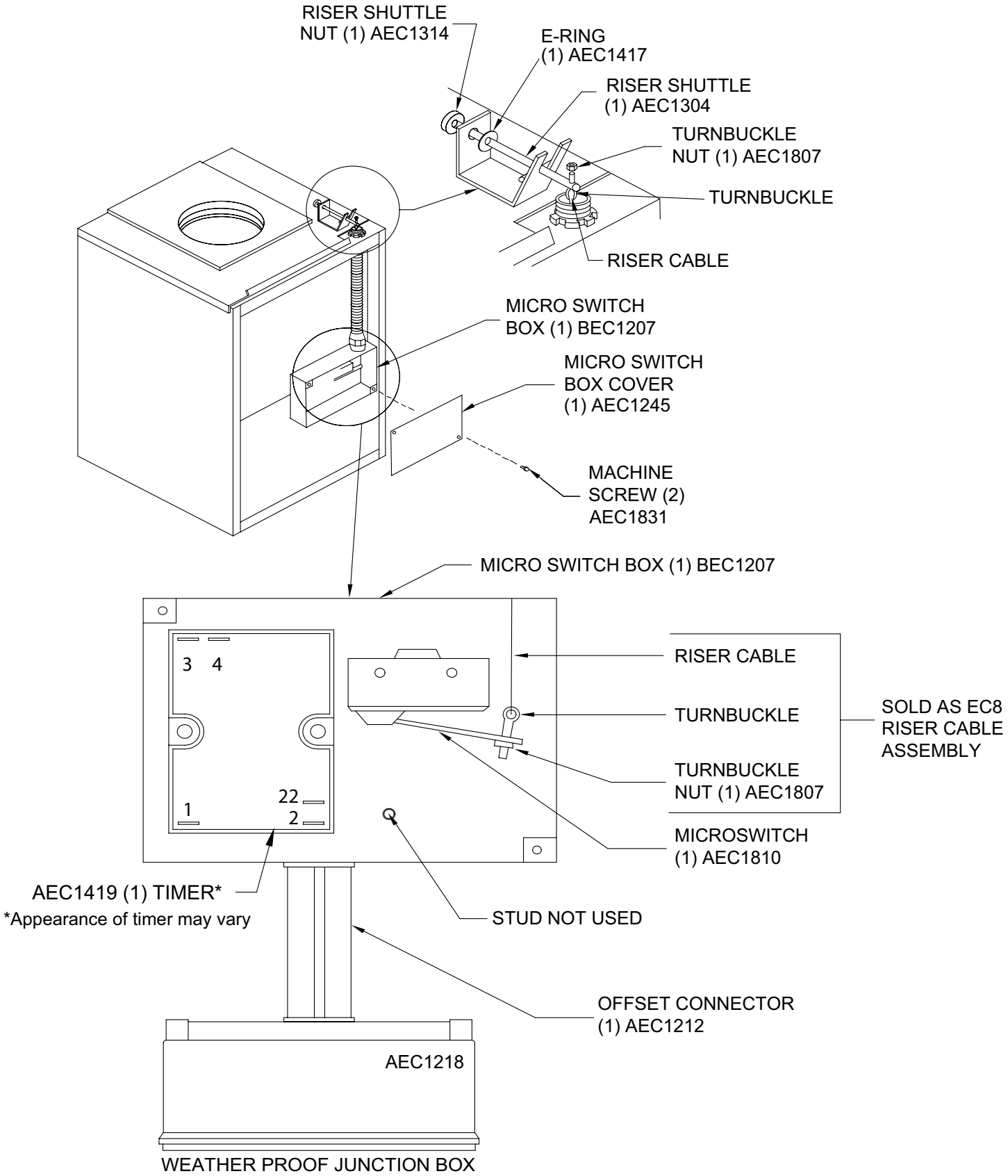
RISER SHUTTLE
NUT (1) AEC1314
E-RING
(1) AEC1417
RISER SHUTTLE
(1) AEC1304
TURNBUCKLE
NUT (1) AEC1807
TURNBUCKLE
RISER CABLE
MICRO SWITCH
BOX (1) BEC1207
MICRO SWITCH
BOX COVER
(1) AEC1245
MACHINE
SCREW (2)
AEC1831
MICRO SWITCH BOX (1) BEC1207
3 4
1
22
2
RISER CABLE
TURNBUCKLE
TURNBUCKLE
NUT (1) AEC1807
SOLD AS EC8
RISER CABLE
ASSEMBLY
MICROSWITCH
(1) AEC1810
AEC1419 (1) TIMER*
*Appearance of timer may vary
STUD NOT USED
OFFSET CONNECTOR
(1) AEC1212
AEC1218
WEATHER PROOF JUNCTION BOX

REMOVE RISER CABLE ASSEMBLY

Do this FIRST

Make certain you have all the correct parts and fasteners necessary for correct installation. Re-use any components that are not damaged, otherwise replace them. Parts used in this process: (2) AEC1807 Turnbuckle Nut, (1) EC8 Riser Cable Assembly, (2) AEC1831 Machine Screw, (1) AEC1245 Micro Switch Box Cover. Plus any components required to reinstall the Sub-Top and Top Assemblies (Page 17).

REMOVE RISER CABLE ASSEMBLY

1) Remove SUITMATE® unit from the Wall Mount Bracket. See instructions beginning on Page 14.
2) Remove Top and Sub-Top Assemblies. See instructions beginning on Page 15.
3) Place the SUITMATE® unit in an upright position with the back of the unit facing out.
4) Remove the Micro Switch Box Cover. The cover is held on with (2) Machine Screws. Remove the cover and screws and set aside for reassembly.
5) Remove the Turnbuckle Nut from the Turnbuckle.
6) Pull the Turnbuckle up and out of the hole in the Micro Switch arm.
7) Remove the Riser Cable by pulling it up through the conduit connector at the top of the unit.

REPLACE RISER CABLE ASSEMBLY

1) Ensure that all rivet debris and all foreign objects have been removed from the Liner.
2) Reinstall Sub-Top Assembly (Page 17) before starting with the Riser Cable replacement.
3) Drop the new Riser Cable (with Turnbuckle) down through the conduit to the Micro Switch.
4) Insert the Turnbuckle through the hole in the Micro Switch arm. Replace the Nut (saved from step 5 above) on the Turnbuckle.
5) Insert the Turnbuckle on the new Riser Cable through the hole in the Riser Shuttle. Replace the Turnbuckle Nut.
6) Replace Top Assembly. See instructions beginning on Page 17.
7) Push the Lid down. The Micro Switch should NOT activate (click) until the Lid is approximately ¼ inch from being totally depressed. Adjust the alignment by tightening (clockwise – will activate unit sooner) or loosening (counter-clockwise – will activate unit later) the Turnbuckle Nut on the bottom of the Riser Cable until the proper adjustment is obtained. Do not bend the Micro Switch arm. For additional information refer to the MICRO SWITCH ADJUSTMENT PROCEDURE (on Page 47) section in this manual.
8) Provide power to the unit to make certain it is functioning properly, test it.
9) Disconnect power to the unit.
10) Replace the Micro Switch Box Cover securing it with the (2) Machine Screws removed in step 4 above.
11) Reinstall the SUITMATE® unit to the Wall Mount Bracket. See instructions beginning on Page 14.
12) Retest the SUITMATE® unit for proper operation, refer to TESTING AND OPERATION on Page 7.

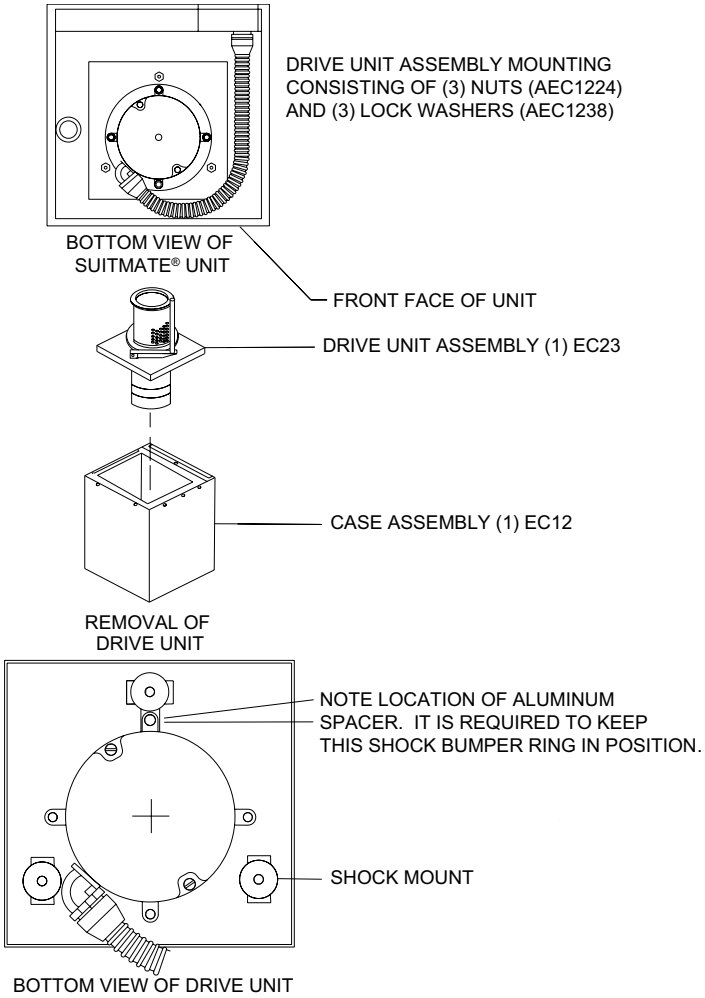

Photograph shows the Correct Position of Wires for Rewiring the Motor

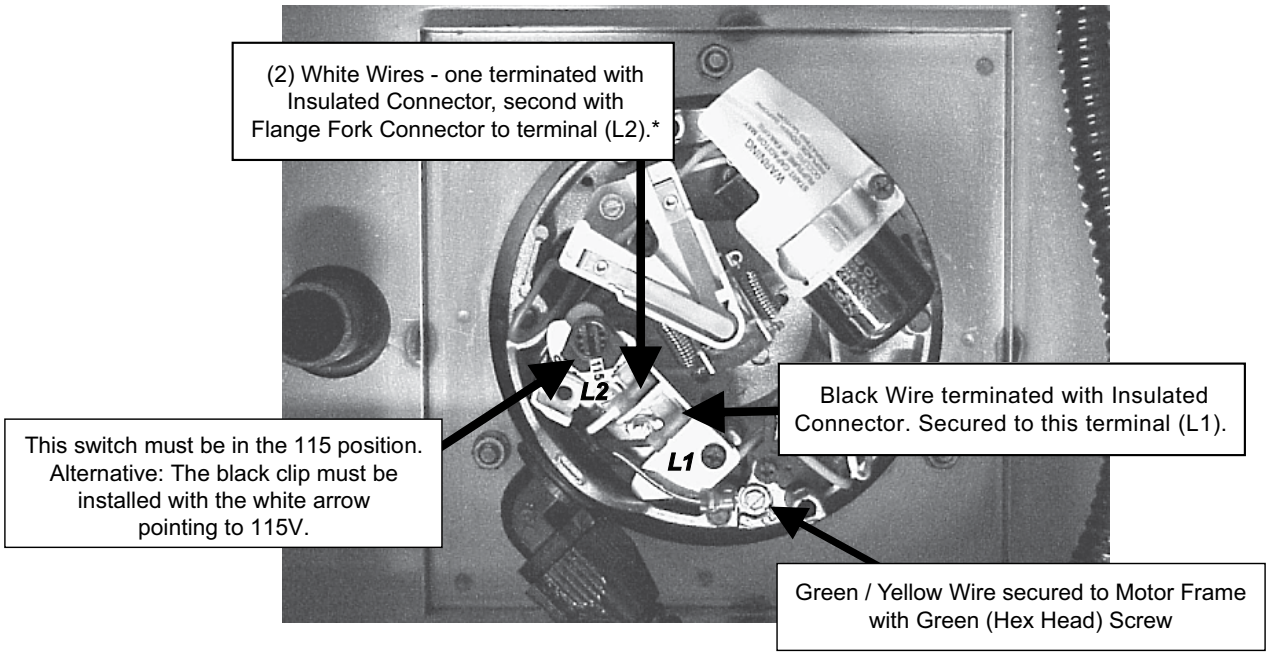

**On units without a Timer, there is (1) White Wire.*

REMOVE DRIVE UNIT ASSEMBLY FROM CASE

Do this FIRST

Make certain you have all the correct parts and fasteners necessary for correct installation. Re-use any components that are not damaged, otherwise replace them. Parts used in this process: (3) AEC1224 Hex Nuts, (3) AEC1238 Lock Washers, (2) AEC1819 Flange Fork Connectors, (2) AEC1830 Insulated Connectors, (1) AEC1813 White Wire, (1) AEC1842 Black Wire, (1) AEC1841 White Wire, and (1) AEC1813 Green or Green/Yellow Wire.Plus any components required to correctly reinstall the Sub-Top and Top Assemblies (Page 17).

REMOVE DRIVE UNIT ASSEMBLY

1) Remove SUITMATE® unit from the Wall Mount Bracket. See instructions beginning on Page 14.
2) Remove Top and Sub-Top Assemblies. See instructions beginning on Page 15.
3) Place the SUITMATE® on its face to expose the bottom of the unit.
4) Unscrew the (2) captive screws that secure the Motor end cap from the bottom of the Motor.
5) Remove the end cap with captive screws and set it aside for reassembly.
6) Remove the Micro Switch Box Cover. The cover is held on with (2) Machine Screws. Remove cover and screws and set aside for reassembly.
7) Disconnect the (4) wires connecting the motor to the unit by disconnecting the wires from the L1 and L2 terminals on the Motor. Loosen the Green Grounding screw and disconnect the green or green/yellow ground wire. ***Note:*** *On units without a Timer, there are (3) wires.*
8) Cut off the (4) wire connectors from the wires to allow the wires to be pulled through the 90° conduit connector.
9) Pull the wires through the 90° conduit connector by pulling them from the Micro Switch Box about 2 to 3 inches.
10) Remove the 90° conduit connector from the Motor by disconnecting the plastic cable conduit from the 90° conduit connector and unscrewing the 90° conduit connector from the Motor.
11) Return the SUITMATE® unit to its upright position.
12) Remove the three sets of Hex Nuts and Lock Washers that hold the Drive Unit to the Case. Set them aside for reassembly.
13) From the top of the SUITMATE® unit, grasp the sides of the Basket. Remove the Drive Unit by lifting the Drive Unit up at a slight angle.

    Note: *Be careful not to damage the Black Plastic Liner. If the Liner is damaged, it must be replaced.*

REPLACE DRIVE UNIT ASSEMBLY

1) Align the (3) Shock Mounts on the Drive Unit with the (3) holes in the Case and lower the Drive Unit into the Case making certain that the (3) Shock Mounts are in the appropriate holes in the Case, so that the 90° connector will be in the correct position. See the Bottom View diagram of the SUITMATE® unit on Page 22.

   Note: *Be careful not to damage the Black Plastic Liner. If the Liner is damaged, it must be replaced.*
2) Replace the (3) sets of Hex Nuts and Lock Washers on the Shock Mount threaded inserts that protrude through the Case.
3) Replace the 90° conduit connector by screwing it into the Motor.

   Note: *Be careful not to cross thread the threads on the 90° conduit connector.*
4) Reconnect the plastic cable conduit to the 90° conduit connector.
5) Push the (4) wires from the Micro Switch Box up into the Motor. ***Note:*** *On units without a Timer, there are (3) wires.*
6) Strip the (4) wires enough to install the NEW appropriate wire connectors on the wires.
7) Reattach the (4) wire connectors to the appropriate terminals in the Motor: Green or Green/Yellow Wire to green screw, (2) White Wires to terminal L2 (one Insulated and one Flange Fork), and Black Wire to terminal L1.
8) Reinstall the Motor end cap with the (2) captive screws removed in step 5 above.
9) Reinstall the Sub-Top and Top Assemblies. See instructions beginning on Page 17.
10) Reinstall the SUITMATE® unit to the Wall Mount Bracket. See instructions beginning on Page 14.
11) Retest the SUITMATE® unit for proper operation, refer to TESTING AND OPERATION on Page 7.

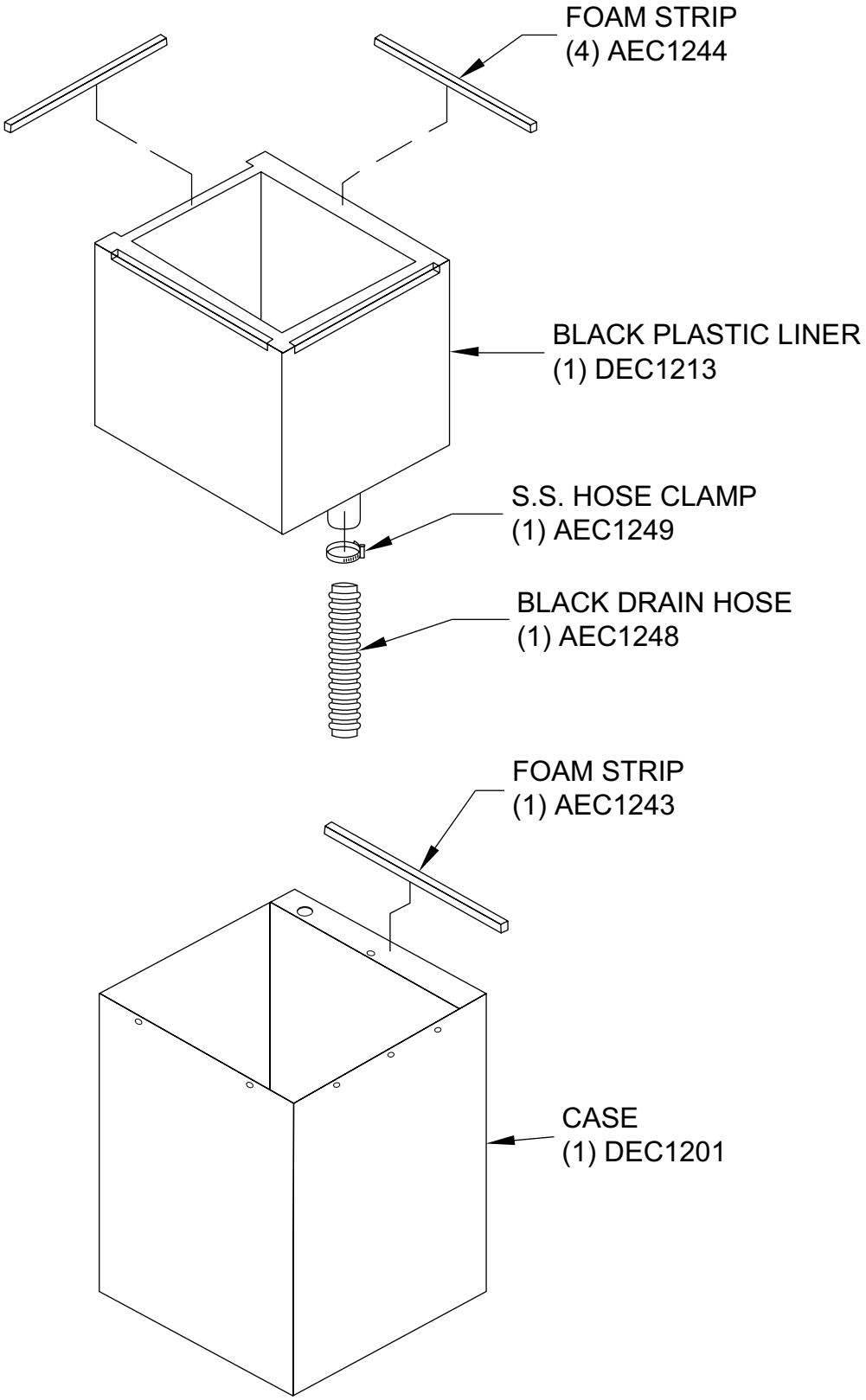
FOAM STRIP
(4) AEC1244
BLACK PLASTIC LINER
(1) DEC1213
S.S. HOSE CLAMP
(1) AEC1249
BLACK DRAIN HOSE
(1) AEC1248
FOAM STRIP
(1) AEC1243
CASE
(1) DEC1201

REMOVE / REPLACE BLACK PLASTIC LINER FROM CASE

Do this FIRST

Make certain you have all the correct parts and fasteners necessary for correct installation. Re-use any components that are not damaged, otherwise replace them. Parts used in this process: (4) AEC1244 Foam Strips, (1) DEC1213 Black Plastic Liner, (1) AEC1249 S.S. Hose Clamp, (1) AEC1248 Black Drain Hose, and (1) AEC1243 Foam Strip. Plus any components required to properly reinstall the Drive Unit Assembly (Page 23) and the Sub-Top and Top Assemblies (Page 17).

REMOVE LINER

1) Remove SUITMATE® unit from the Wall Mount Bracket. See instructions beginning on Page 14.
2) Remove Top and Sub-Top Assemblies. See instructions beginning on Page 15.
3) Remove Drive Unit Assembly. See instructions beginning on Page 23.
4) Place the SUITMATE® unit on its face to expose the bottom of the unit.
5) If the factory supplied drain hose was used, unscrew the hose clamp that holds the plastic drain tube to the Liner drain hose outlet.
6) Remove the drain hose and set it aside for reassembly.
7) Place the SUITMATE® unit in an upright position.
8) From the top of the SUITMATE® unit, grasp the lip of the Black Plastic Liner and pull straight up. Be careful not to damage the Liner. If the Liner is damaged, it must be replaced.

REPLACE LINER

1) Place the Liner into the case using care not to damage it.
2) If the factory supplied drain hose was used, reinstall it using the hose clamp removed in step 5 above.
3) Reinstall the Drive Unit. See instructions beginning on Page 23.
4) Reinstall the Sub-Top and Top Assemblies. See instruction beginning on Page 17.
5) Reinstall SUITMATE® unit to the Wall Mount Bracket. See instructions beginning on Page 14.
6) Retest the SUITMATE® unit proper operation, refer to TESTING AND OPERATION on Page 7.

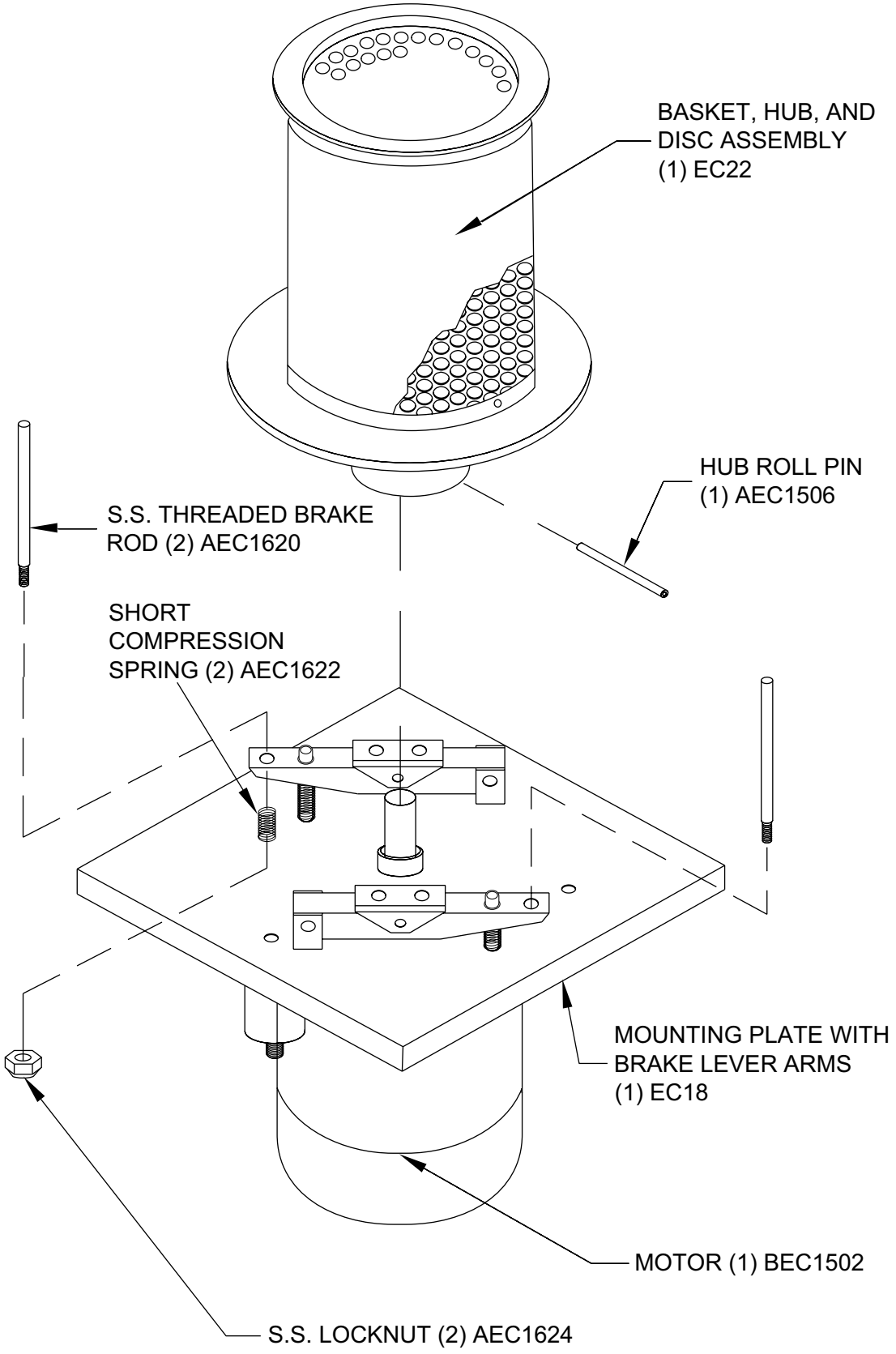
BASKET, HUB, AND
DISC ASSEMBLY
(1) EC22
HUB ROLL PIN
(1) AEC1506
S.S. THREADED BRAKE
ROD (2) AEC1620
SHORT
COMPRESSION
SPRING (2) AEC1622
MOUNTING PLATE WITH
BRAKE LEVER ARMS
(1) EC18
MOTOR (1) BEC1502
S.S. LOCKNUT (2) AEC1624

REMOVE AND REPLACE BRAKE RODS, BASKET, HUB, AND BRAKE DISC ASSEMBLY

Do this FIRST

Make certain you have all the correct parts and fasteners necessary for correct installation. Re-use any components that are not damaged, otherwise replace them. Parts used in this process: (1) EC22 Basket and Brake Disc Assembly, (1) AEC1506 Hub Roll Pin, (2) AEC1620 S.S. Threaded Brake Rods, (2) AEC1622 Short Compression Springs, (2) AEC1624 S.S. Locknuts, and (1) BEC1502 Motor (115 V, 60 Hz). Plus any components required to properly reinstall the Drive Unit Assembly (Page 23) and the Sub-Top and Top Assemblies (Page 17).

REMOVE BRAKE RODS, BASKET, HUB, AND BRAKE DISC ASSEMBLY

1) Remove SUITMATE® unit from the Wall Mount Bracket. See instructions beginning on Page 14.
2) Remove Top and Sub-Top Assemblies. See instructions beginning on Page 15.
3) Remove Drive Unit Assembly. See instructions beginning on Page 23.

   Note: *If Basket itself is damaged it must be replaced, please contact Extractor Corporation at: (Toll Free) 800-553-3353, (Telephone) 847-742-3532, or (E-Mail) info@suitmate.com.*

4) Remove the Brake Rods from the Drive Unit Assembly by removing the Locknut and Short Compression Spring on each Brake Rod. Set the Brake Rods, springs, and locknuts aside for reassembly. Inspect and replace the Short Compression Springs if any wear or deformation is observed.
5) Place a C-clamp over each Brake Lever Arm and under the Motor Mounting Plate. Tighten the C-clamps to allow free rotation of the Basket and Motor shaft.

   Note: *Do not remove C-clamps!*

6) Rotate the Hub so that the hole for the Hub Roll Pin that holds the Basket, Hub, and Brake Disc Assembly to the Motor shaft can be clearly seen.
7) Use a hammer and a 3/16 inch drift punch to remove the Hub Roll Pin that holds the Basket, Hub, and Brake Disc Assembly to the Motor shaft. A new Hub Roll Pin is required for reassembly (Part Number AEC1506).
8) Using a small pry bar or large screwdriver, pry up on the Hub to free it from the Motor shaft. Rotate the Basket, Hub, and Brake Disc Assembly so that even pressure is exerted evenly around the Hub and Motor shaft. Repeat until you can manually remove the Basket and Brake Disc Assembly from the Motor shaft. Be careful not to damage the Hub or the Motor Mounting Plate. If the Hub is “frozen” to the Motor shaft, please contact Extractor Corporation at: (Toll Free) 800-553-3353, (Telephone) 847-742-3532, or (E-Mail) info@suitmate.com and explain your problem.

REPLACE BRAKE RODS, BASKET, HUB, AND BRAKE DISC ASSEMBLY

1) Push the Basket, Hub, and Brake Disc Assembly onto the Motor Shaft so that the hole in the Hub lines up with the hole in the Motor Shaft.

   Note: *Apply a light coat of grease to the Motor shaft to facilitate assembly.*

   Note: *It may be necessary to gently tap the Hub down onto the Motor shaft. Do not tap or pound directly on the basket.*

2) Use a 3/16 inch drive pin punch to test for the proper hole alignment of the Hub and the Motor Shaft.
3) Drive a NEW Hub Roll Pin (Part Number AEC1506) into the Hub and through the Motor Shaft so that the pin is flush with the Hub.
4) Remove the C-clamps.
5) Reinstall the Brake Rods onto the Drive Unit Assembly by installing the Locknut and Short Compression Spring on each Brake Rod removed in step 4 above.
6) Reinstall Drive Unit Assembly. See instructions beginning on Page 23.
7) Reinstall Sub-Top and Top Assemblies. See instructions beginning on Page 17.
8) Reinstall SUITMATE® unit to the Wall Mount Bracket. See instructions beginning on Page 14.
9) Retest the SUITMATE® unit for proper operation, refer to TESTING AND OPERATION on Page 7.

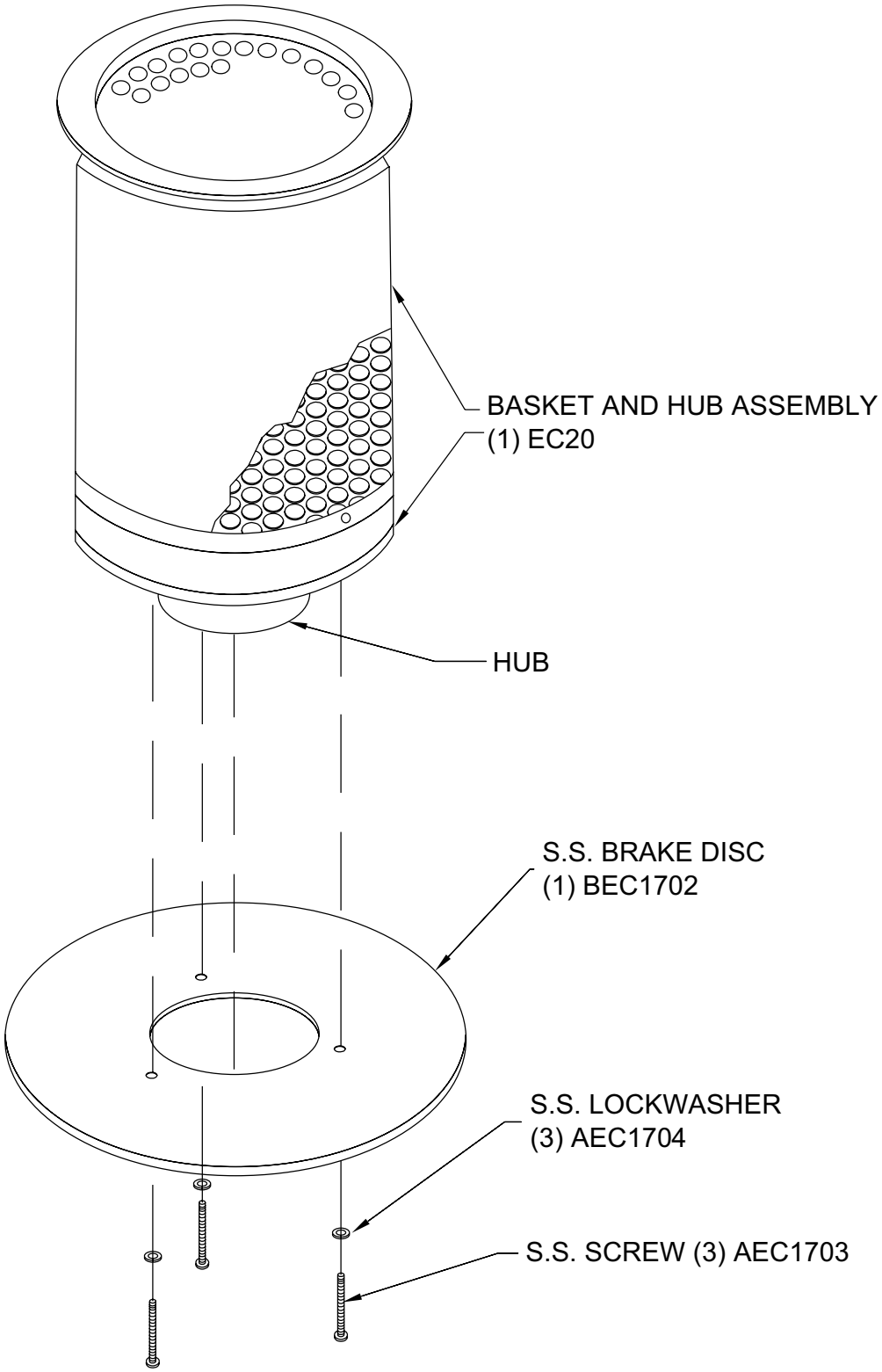
BASKET AND HUB ASSEMBLY
(1) EC20
HUB
S.S. BRAKE DISC
(1) BEC1702
S.S. LOCKWASHER
(3) AEC1704
S.S. SCREW (3) AEC1703

REMOVE / REPLACE BRAKE DISC AND BASKET

Do this FIRST

Make certain you have the correct parts and fasteners necessary for correct installation. Re-use any components that are not damaged, otherwise replace them. Parts used in this process: (1) EC20 Basket and Hub Assembly, (1) BEC1702 S.S. Brake Disc, (3) AEC1704 S.S. Lockwashers, (3) AEC1703 S.S. Screws. Plus any components required to properly reinstall the Drive Unit Assembly (Page 23) and the Sub-Top and Top Assemblies (Page 17).

REMOVE BRAKE DISC AND BASKET

1) Remove SUITMATE® unit from the Wall Mount Bracket. See instructions beginning on Page 14.
2) Remove Top and Sub-Top Assemblies. See instructions beginning on Page 15.
3) Remove Drive Unit Assembly. See instructions beginning on Page 23.
4) Remove Brake Rods, Basket, Hub and Brake Disc Assembly. See instructions beginning on Page 27.
5) Remove the (3) screws and washers from the bottom of the Hub Assembly. Set them aside for reassembly.
6) Remove the Brake Disc from the Hub. The Brake Disc may have to be tapped off using a small plastic hammer. Replace if necessary.

REPLACE BRAKE DISC AND BASKET

1) Replace the Brake Disc by assembling it over the Hub and aligning the (3) holes. Secure the Brake Disc using (3) screws and (3) Lock Washers removed in Step 5 above.

   Note: *Apply a light coat of grease to the screws to facilitate assembly.*
2) Reinstall the Brake Disc and Basket Assembly onto the motor shaft. See instructions beginning on Page 27.
3) Reinstall the Brake Rods to the Drive Unit Assembly by installing the Locknut and Short Compression Spring on each Brake Rod.
4) Reinstall Drive Unit Assembly. See instructions beginning on Page 23.
5) Reinstall Sub-Top and Top Assemblies. See instructions beginning on Page 17.
6) Reinstall SUITMATE® unit to the Wall Mount Bracket. See instructions beginning on Page 14.
7) Retest the SUITMATE® unit for proper operation, refer to TESTING AND OPERATION on Page 7.

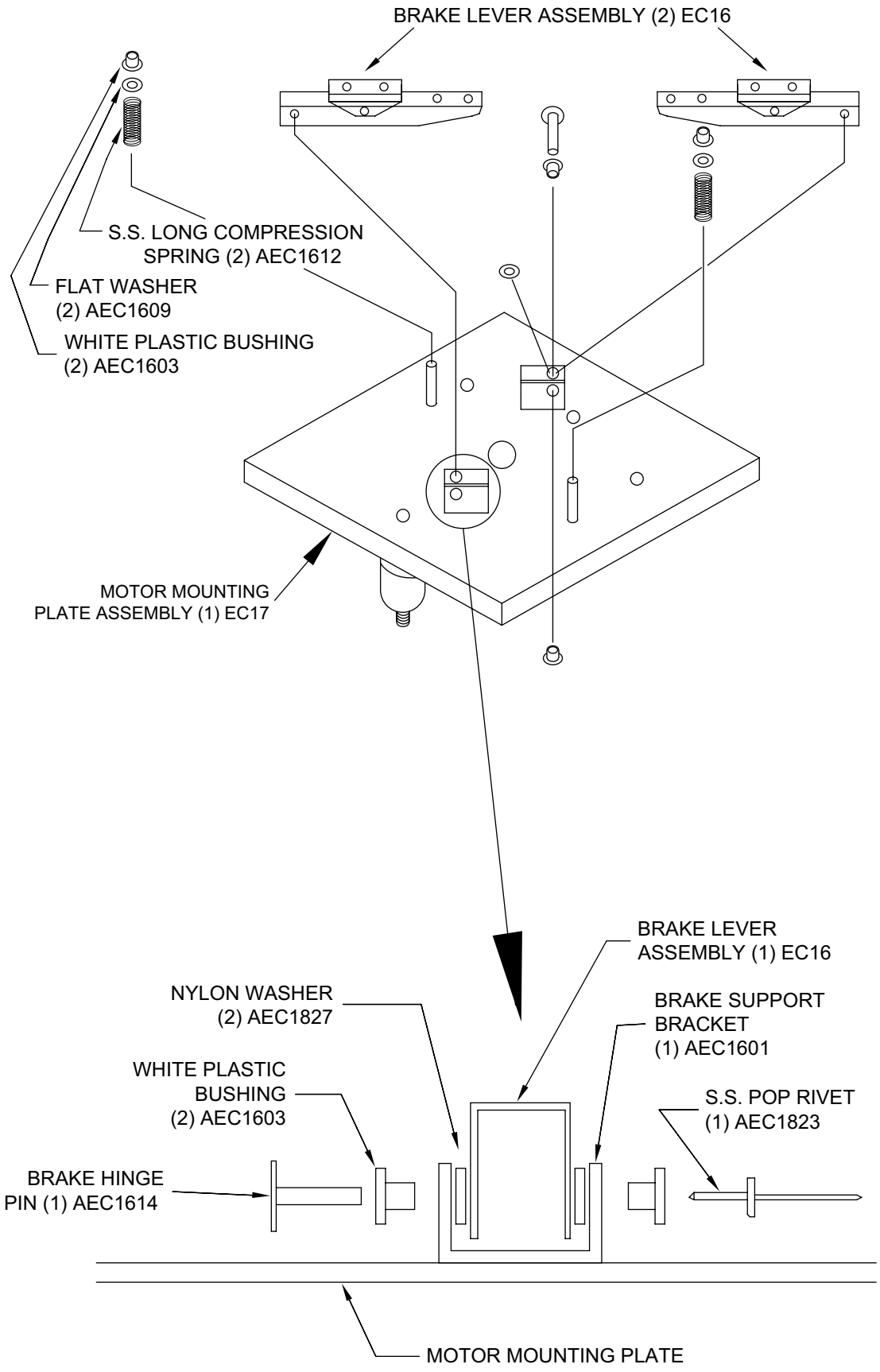
BRAKE LEVER ASSEMBLY (2) EC16
S.S. LONG COMPRESSION SPRING (2) AEC1612
FLAT WASHER (2) AEC1609
WHITE PLASTIC BUSHING (2) AEC1603
MOTOR MOUNTING PLATE ASSEMBLY (1) EC17
BRAKE LEVER ASSEMBLY (1) EC16
NYLON WASHER (2) AEC1827
BRAKE SUPPORT BRACKET (1) AEC1601
WHITE PLASTIC BUSHING (2) AEC1603
S.S. POP RIVET (1) AEC1823
BRAKE HINGE PIN (1) AEC1614
MOTOR MOUNTING PLATE

REMOVE / REPLACE BRAKE LEVER ASSEMBLY

Do this FIRST

Make certain you have all the correct parts and fasteners necessary for correct installation. Re-use any components that are not damaged, otherwise replace them. Extractor recommends that a Brake Parts Kit AEC2300 be purchased. In the absence of purchasing a Brake Parts Kit, the following parts are used in the process: (2) AEC1614 Brake Hinge Pins, (6) AEC1603 White Plastic Bushings, (4) AEC1827 Nylon Washers, (2) EC16 Brake Lever Assemblies, (2) AEC1823 S.S. Pop Rivets. Plus any components required to properly reinstall the Basket and Brake Disc Assembly (Page 29), the Drive Unit Assembly (Page 23), and the Sub-Top and Top Assemblies (Page 17).

REMOVE BRAKE LEVER ASSEMBLY

1) Remove SUITMATE® unit from the Wall Mount Bracket. See instructions beginning on Page 14.
2) Remove Top and Sub-Top Assemblies. See instructions beginning on Page 15.
3) Remove Drive Unit Assembly. See instructions beginning on Page 23.
4) Remove Basket, Hub, and Brake Disc Assembly. See instructions beginning on Page 27.

   Note: *Make certain that the C-clamps have been removed from the Brake Levers.*

5) Remove the Long Compression Spring, Flat Washer, and White Plastic Bushing. Set them aside for reassembly.

   Note: *Pay attention to the location of the spring, washer and plastic bushing. It is recommended that the Long Compression Spring (AEC1612) and White Plastic Bushing (AEC1603) be replaced.*

6) Remove the rivet that holds the Brake Lever Assembly to the Brake Support Bracket on the Motor Mounting Plate. Refer to drawing on bottom of Page 30.
   a. Drill out the rivet with a #20 (0.161 inch) drill bit.
   b. Chisel off the rivet head.
7) Remove and discard the Brake Hinge Pin.
8) Remove the old Brake Lever Assembly.

   Note: *Pay attention to the placement and alignment of the plastic bushings and plastic washers in the Brake Assembly. Set them aside for reassembly. Inspect the Brake levers, springs, plastic bushings and washers for wear and replace with new ones if necessary.*

REPLACE BRAKE LEVER ASSEMBLY

1) Replace the Brake Lever Assembly by reversing the above procedure. A NEW Hinge Pin and pop rivet MUST be used.

   Note: *Be certain that the plastic bushing and washers are in "new" condition and in their proper locations. Make certain to reinstall the C-clamps on the Brake Levers. The height of the Brake Pad should be less than 1 3/8 inches (3.5cm) high as measured from the Motor Mounting Plate.*

2) Reinstall the Brake Disc and Basket. See instructions beginning on Page 27.
3) Reinstall Drive Unit Assembly. See instructions beginning on Page 23.
4) Reinstall Sub-Top and Top Assemblies. See instructions beginning on Page 17.
5) Reinstall SUITMATE® unit to the Wall Mount Bracket. See instructions beginning on Page 14.
6) Retest the SUITMATE® unit for proper operation, refer to TESTING AND OPERATION on Page 7.

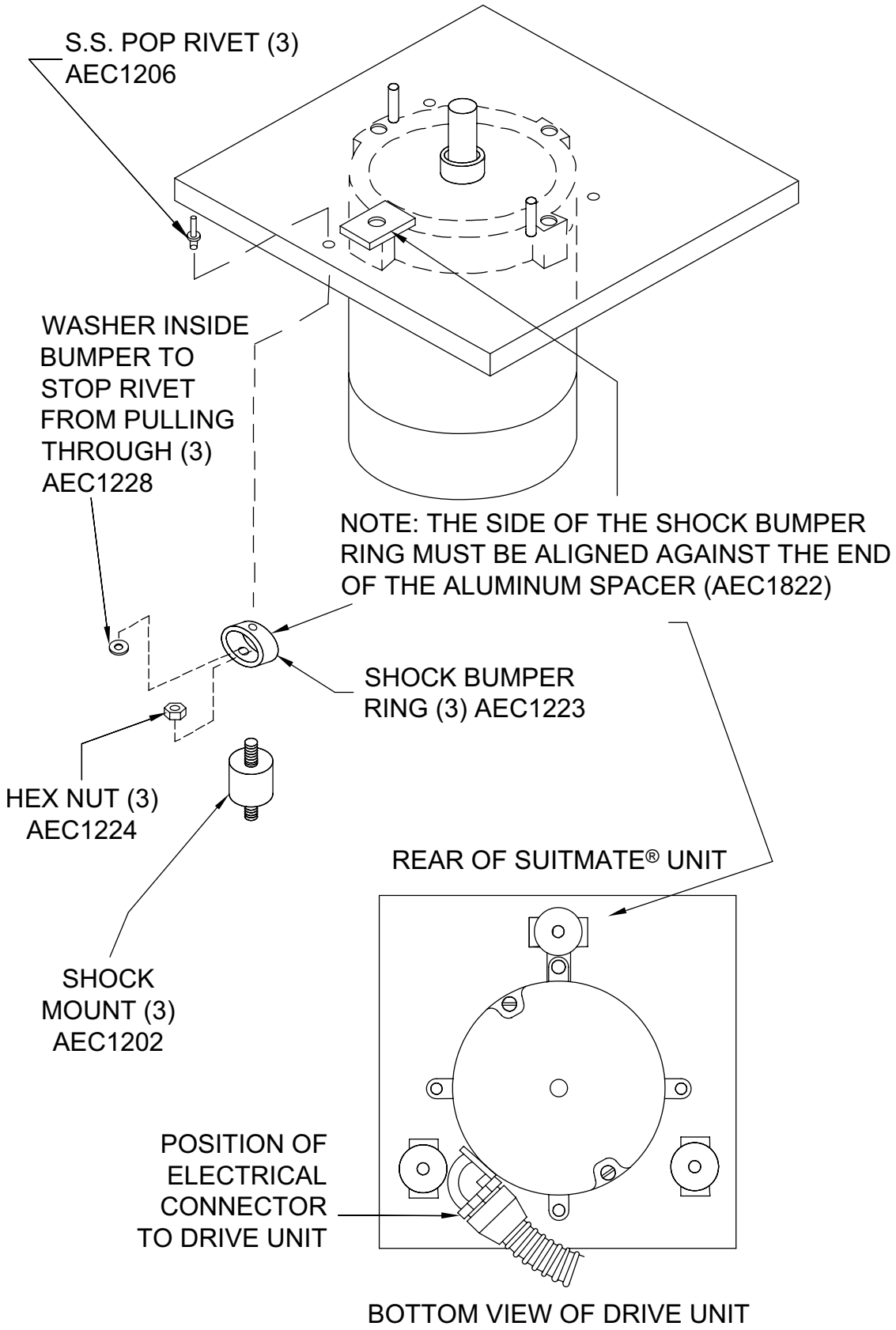
S.S. POP RIVET (3)
AEC1206
WASHER INSIDE BUMPER TO STOP RIVET FROM PULLING THROUGH (3) AEC1228
NOTE: THE SIDE OF THE SHOCK BUMPER RING MUST BE ALIGNED AGAINST THE END OF THE ALUMINUM SPACER (AEC1822)
SHOCK BUMPER RING (3) AEC1223
HEX NUT (3)
AEC1224
SHOCK MOUNT (3)
AEC1202
REAR OF SUITMATE® UNIT
POSITION OF ELECTRICAL CONNECTOR TO DRIVE UNIT
BOTTOM VIEW OF DRIVE UNIT

REMOVE AND REPLACE SHOCK MOUNTS

Do this FIRST

Make certain you have all the correct parts and fasteners necessary for correct installation. Re-use any components that are not damaged, otherwise replace them. Parts used in this process: (3) AEC1202 Shock Mounts, (3) AEC1224 S.S. Hex Nuts. Plus any components required to properly reinstall the Drive Unit Assembly (Page 23) and the Sub-Top and Top Assemblies (Page 17).

REMOVE SHOCK MOUNTS

1) Remove SUITMATE® unit from the Wall Mount Bracket. See instructions beginning on Page 14.
2) Remove Top and Sub-Top Assemblies. See instructions beginning on Page 15.
3) Remove Drive Unit Assembly. See instructions beginning on Page 23.
4) Remove the S.S. Hex Nut that secures the Shock Mount to the Shock Bumper Ring.
5) Remove the Shock Mount from the Shock Bumper Ring.

REPLACE SHOCK MOUNTS

1) Install the new Shock Mount to the Shock Bumper Ring and secure using the S.S. Hex Nut.

   Note: *Use a small drop of threadlocker when securing the S.S. Hex Nut.*

   Note: *Use new S.S. Hex Nuts if necessary.*
2) Reinstall Drive Unit Assembly. See instructions beginning on Page 23.
3) Reinstall Sub-Top and Top Assemblies. See instructions beginning on Page 17.
4) Reinstall SUITMATE® unit to the Wall Mount Bracket. See instructions beginning on Page 14.
5) Retest the SUITMATE® unit for proper operation, refer to TESTING AND OPERATION on Page 7.

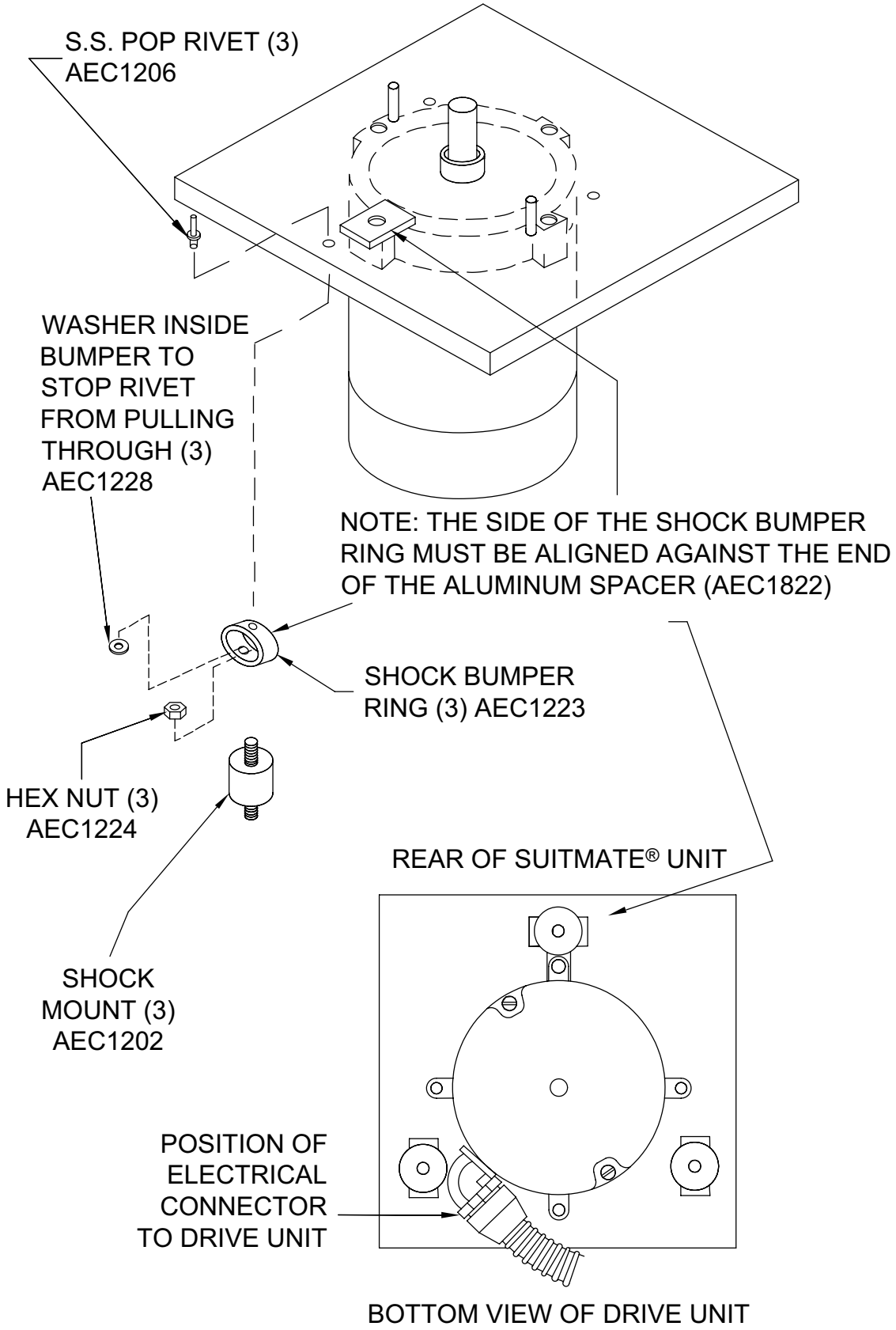
S.S. POP RIVET (3)
AEC1206
WASHER INSIDE
BUMPER TO
STOP RIVET
FROM PULLING
THROUGH (3)
AEC1228
NOTE: THE SIDE OF THE SHOCK BUMPER
RING MUST BE ALIGNED AGAINST THE END
OF THE ALUMINUM SPACER (AEC1822)
SHOCK BUMPER
RING (3) AEC1223
HEX NUT (3)
AEC1224
SHOCK
MOUNT (3)
AEC1202
REAR OF SUITMATE® UNIT
POSITION OF
ELECTRICAL
CONNECTOR
TO DRIVE UNIT
BOTTOM VIEW OF DRIVE UNIT

REMOVE AND REPLACE SHOCK BUMPER RINGS

Do this FIRST

Make certain you have all the correct parts and fasteners necessary for correct installation. Re-use any components that are not damaged, otherwise replace them. Parts used in this process: (3) AEC1223 Shock Bumper Rings, (3) AEC1228 Washers, (3) AEC1206 S.S. Pop Rivets. Plus any components required to properly reinstall the Shock Mounts (Page 35), the Basket, Hub and Brake Disc Assembly (Page 27), the Drive Unit Assembly (Page 23), and the Sub-Top and Top Assemblies (Page 17).

REMOVE SHOCK BUMPER RINGS

1) Remove SUITMATE® unit from the Wall Mount Bracket. See instructions beginning on Page 14.

2) Remove Top and Sub-Top Assemblies. See instructions beginning on Page 15.

3) Remove Drive Unit Assembly. See instructions beginning on Page 23.

4) Remove the (3) S.S. Hex Nuts that secure the (3) Shock Mounts to the (3) Shock Bumper Rings.

5) Remove the Shock Mount from the Shock Bumper Ring.

   Note: *Examine the positions of the 3 Shock Bumper Rings. Two Bumper Rings should be parallel to each other. The third should be perpendicular to the other two. See Bottom View of Drive Unit on Page 36 for details.*

6) Remove the rivet that holds the Shock Bumper Ring to the Motor Mounting Plate.

   a. Drill out the rivet with a #15 (0.180 inch) drill bit.

   b. Chisel off the rivet head. Make sure the rivet is completely removed.

      Note: *Set aside the small washer that helps to secure the Shock Bumper Ring to the Motor Mounting Plate. If the washers are deformed, they must be replaced.*

REPLACE SHOCK BUMPER RINGS

1) Rivet the Shock Bumper Ring to the Motor Mounting Plate.

   Note: *Be certain to use the small washer (AEC1228) in riveting the Shock Bumper Ring to the Motor Mounting Plate. Make certain the Shock Bumper Ring Assembly is properly aligned with the other two Bumper Rings. Failure to do so will prevent proper reassembly of the SUITMATE® unit.*

2) Apply clear Silicone sealer (available locally) on the rivet head located on top of the Motor Mounting Plate.

3) Reinstall the (3) Shock Mounts. See instructions beginning on Page 35.

4) Reinstall Drive Unit Assembly. See instructions beginning on Page 23.

5) Reinstall Sub-Top and Top Assemblies. See instructions beginning on Page 17.

6) Reinstall the SUITMATE® unit to the Wall Mount Bracket. See instructions beginning on Page 14.

7) Retest the SUITMATE® unit for proper operation, refer to TESTING AND OPERATION on Page 7.

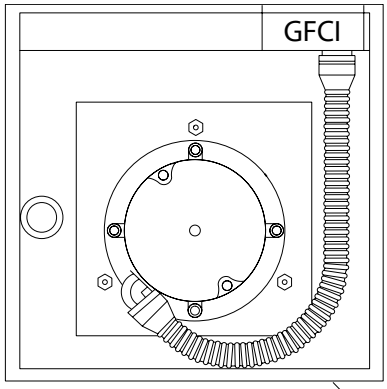

DRIVE UNIT ASSEMBLY MOUNTING CONSISTING OF (3) NUTS (AEC1224) AND (3) LOCK WASHERS (AEC1238)

BOTTOM VIEW OF SUITMATE® UNIT

FRONT FACE OF UNIT

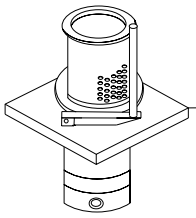

DRIVE UNIT ASSEMBLY (1) EC23

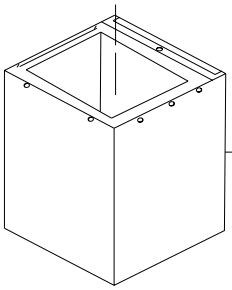

CASE ASSEMBLY (1) EC12

REMOVAL OF DRIVE UNIT

BACK OF UNIT

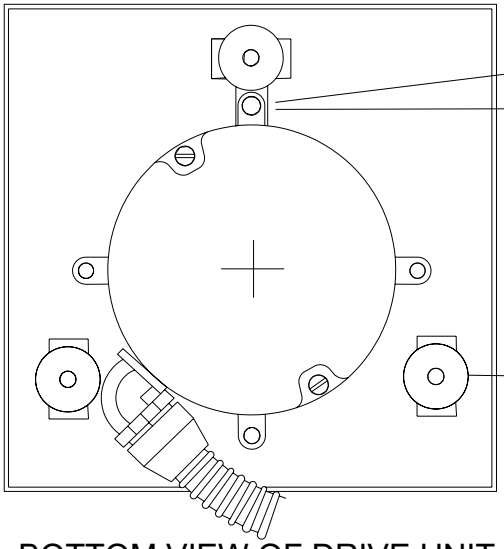

NOTE LOCATION OF ALUMINUM SPACER. IT IS REQUIRED TO KEEP THIS SHOCK BUMPER RING IN POSITION.

SHOCK MOUNT

BOTTOM VIEW OF DRIVE UNIT

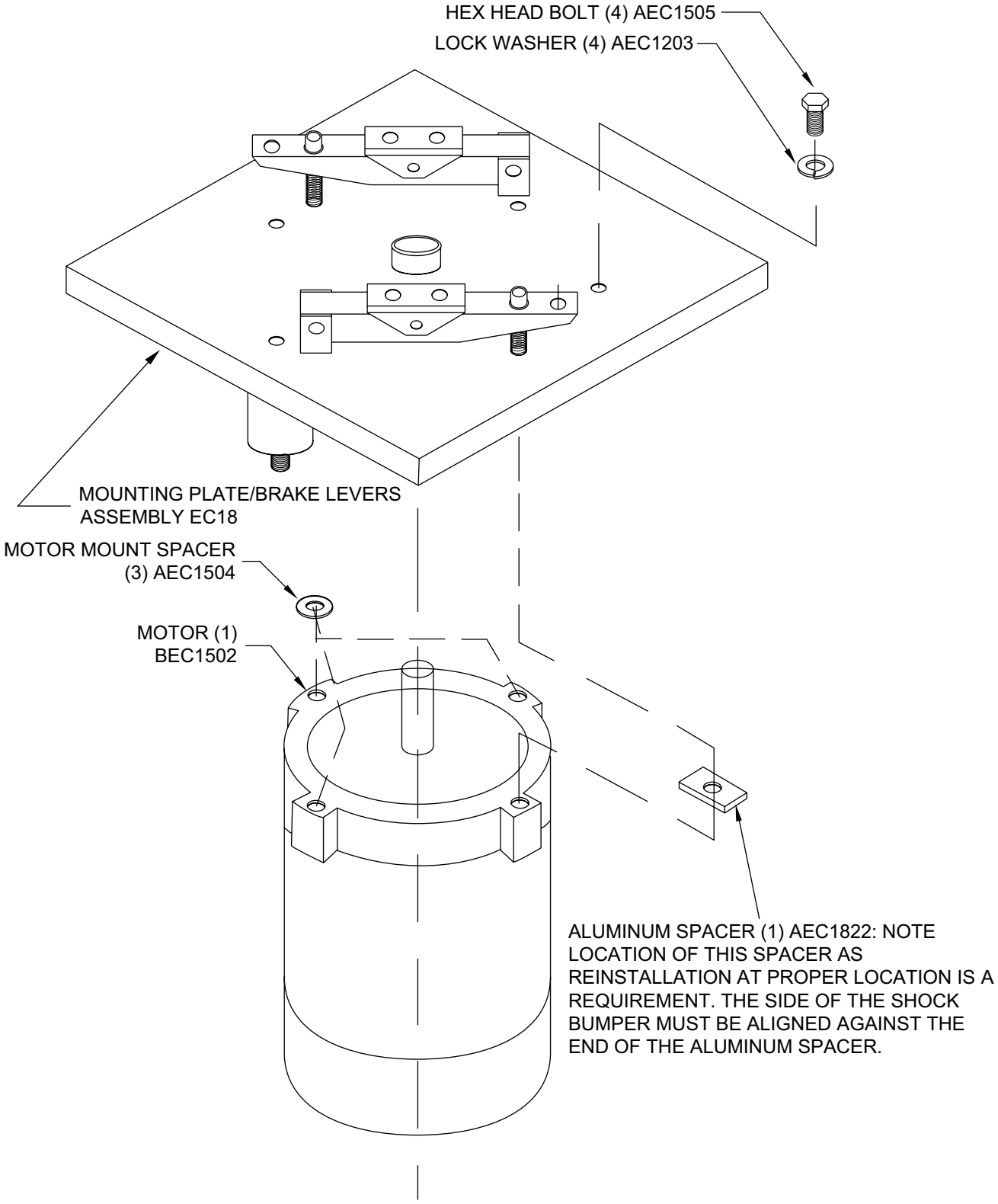
HEX HEAD BOLT (4) AEC1505
LOCK WASHER (4) AEC1203
MOUNTING PLATE/BRAKE LEVERS ASSEMBLY EC18
MOTOR MOUNT SPACER (3) AEC1504
MOTOR (1) BEC1502
ALUMINUM SPACER (1) AEC1822: NOTE LOCATION OF THIS SPACER AS REINSTALLATION AT PROPER LOCATION IS A REQUIREMENT. THE SIDE OF THE SHOCK BUMPER MUST BE ALIGNED AGAINST THE END OF THE ALUMINUM SPACER.

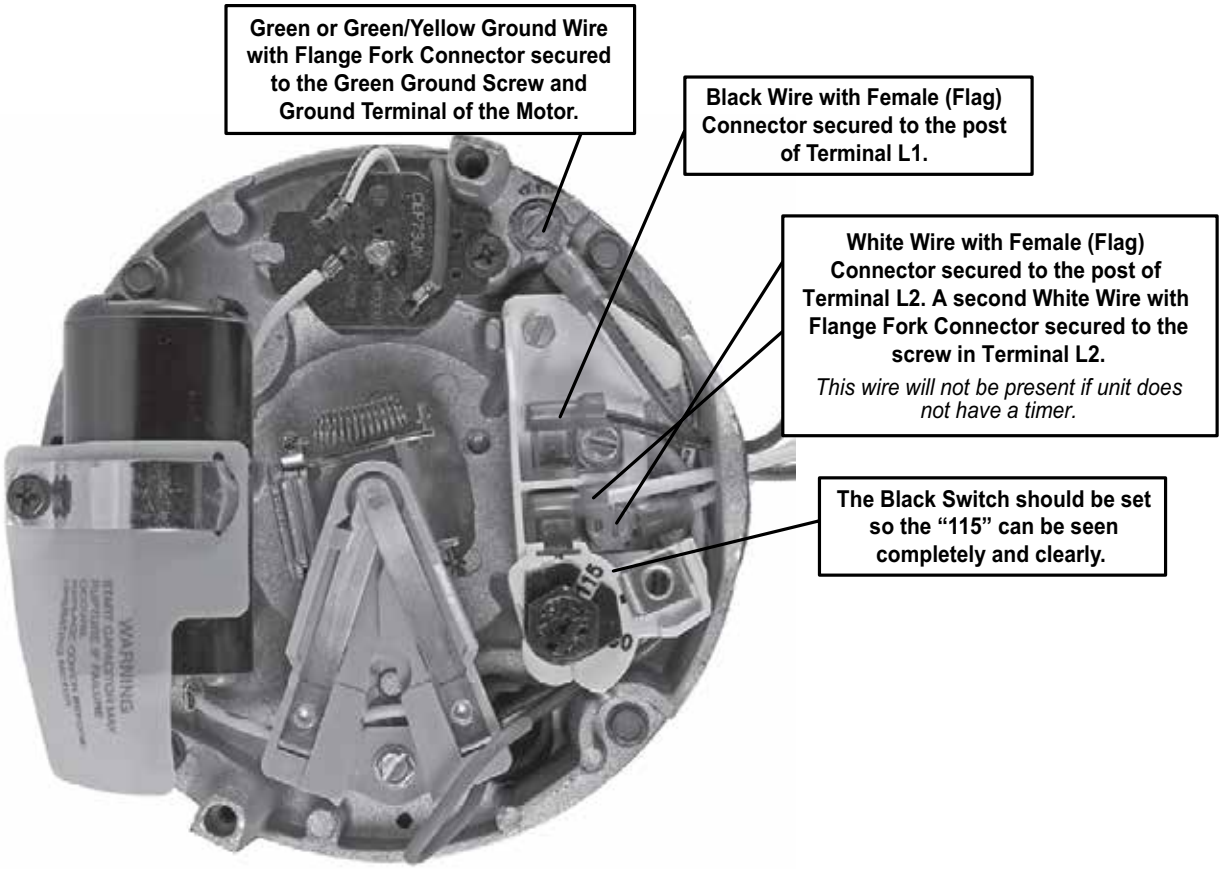

CENTURY MOTOR DETAIL v1

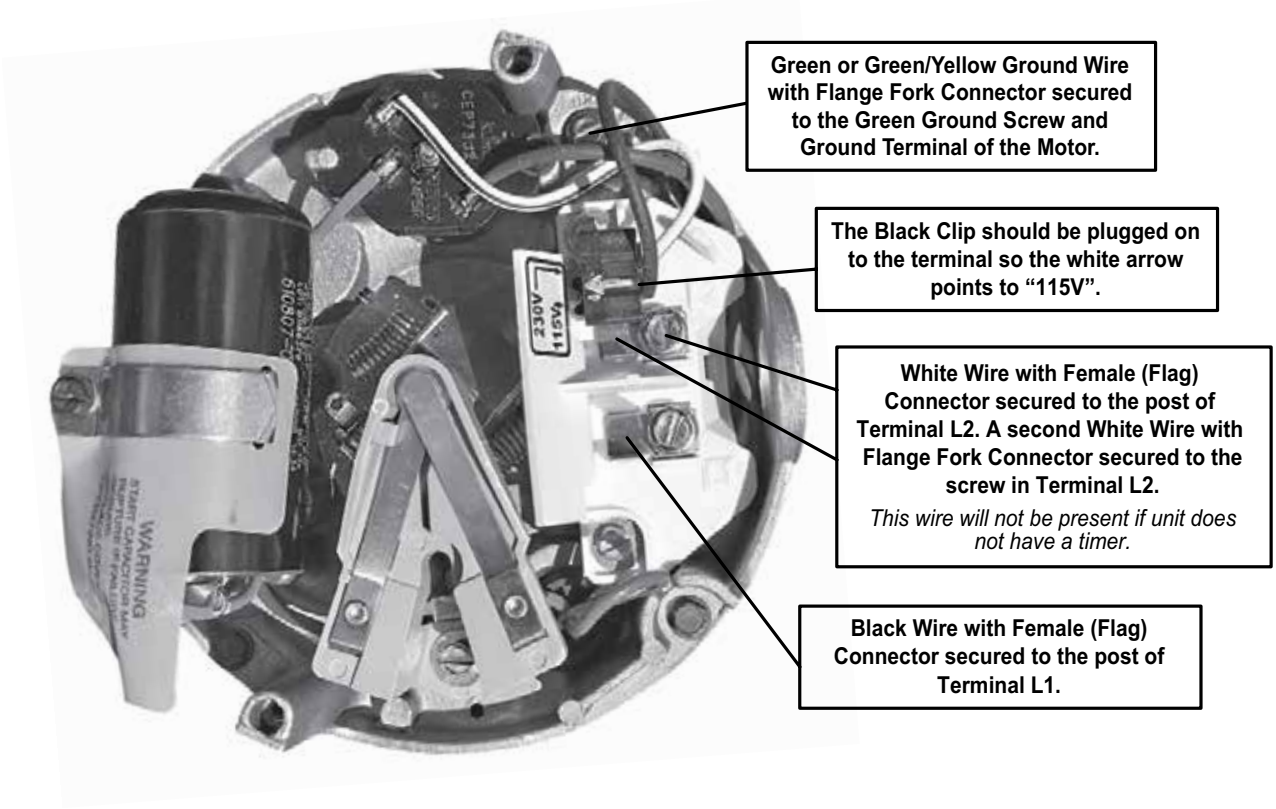

CENTURY MOTOR DETAIL v2

REMOVE AND REPLACE MOTOR

Do this FIRST

Make certain you have all the correct parts and fasteners necessary for correct installation. Re-use any parts that are not damaged, otherwise replace them. Parts used in this process: (1) AEC1822 Aluminum Spacer, (3) AEC1504 Motor Mount Spacers, (4) AEC1505 Hex Head Bolts, (4) AEC1203 Lock Washers, and (1) BEC1502 Motor (115 V, 60 Hz). Plus any components required to properly reinstall the Basket, Hub, and Brake Disc Assembly (Page 27), the Drive Unit Assembly (Page 23), and the Sub-Top and Top Assemblies (Page 17).

REMOVE MOTOR FROM MOUNTING PLATE

1) Remove SUITMATE® unit from the Wall Mount Bracket. See instructions beginning on Page 14.
2) Remove Top and Sub-Top Assemblies. See instructions beginning on Page 15.
3) Remove Drive Unit Assembly. See instructions beginning on Page 23.
4) Remove Basket, Hub, and Brake Disc Assembly. See instructions beginning on Page 27.
5) Referring to photograph and drawings on Pages 38 through 40, remove the (4) Hex Head Bolts, Lock Washers, and Motor Mount Spacers that hold the Motor to the Mounting Plate.

   Note: *Examine the placement of the (4) spacers, especially the AEC1822 Aluminum Spacer next to the Shock Bumper Ring. The rectangular spacer prevents the Shock Bumper Ring from moving. Examine the location of the Motor for the* 90° *connector in relation to the three Shock Mounts.*
6) Remove the Motor and set aside.

REPLACE MOTOR

1) Replace the motor using the (4) bolts and (4) lock washers, especially noting placement of the AEC1822 Aluminum Spacer next to the Shock Bumper Ring. See Bottom View of Drive Unit on Page 38 for detail. In addition see the photograph and drawings on Pages 38 and 40.

   Note: *When reassembling, use silicone sealer on the bolts and lock washers to preserve water tightness.*
2) Reinstall Basket, Hub, and Brake Disc Assembly. See instructions beginning on Page 27.
3) Reinstall Drive Unit Assembly. See instructions beginning on Page 23.
4) Reinstall Sub-Top and Top Assemblies. See instructions beginning on Page 17.
5) Reinstall the SUITMATE® unit to the Wall Mount Bracket. See instructions beginning on Page 14.
6) Retest the SUTIMATE® unit for proper operation. Refer to TESTING AND OPERATION on Page 7.

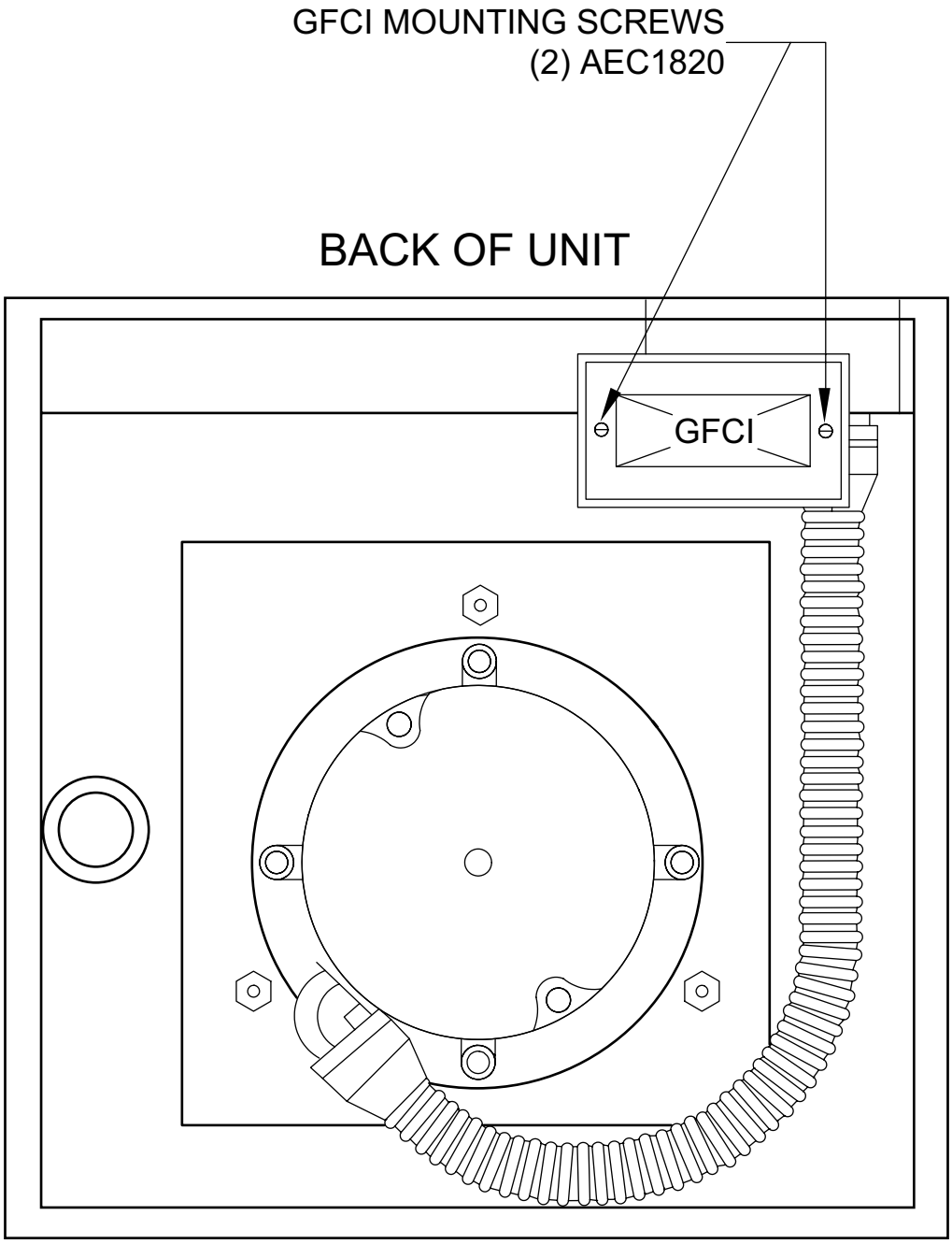

BOTTOM VIEW OF SUITMATE® UNIT

ELECTRICAL ASSEMBLIES

115 V, 60 Hz, 8.6 Amp SUITMATE® Unit

GENERAL

When servicing the SUITMATE® unit, observe the following safety precautions:

Always turn off the power at the circuit breaker – place a lockout tag on the circuit breaker panel indicating that the breaker is not to be turned on except by authorized personnel – and disconnect the unit before doing any work on the SUITMATE® unit. Simply turning off a switch is NOT enough.

Use only proper tools, test equipment, and work practices when servicing the SUITMATE® unit. If there are any questions concerning proper tools, equipment or practices, please contact the factory for recommendations at: (Toll Free) 800-553-3353, (Telephone) 847-742-3532, or (E-Mail) info@suitmate.com.

Due to critical tolerances, use only specified replacement parts. See the SUITMATE® UNIT PARTS AND ASSEMBLIES LIST in this manual.

REMOVE AND REPLACE GFCI

The GFCI can be serviced from the bottom of the unit without removing the unit from the wall.

Do this FIRST

Make certain you have all the correct parts and fasteners necessary for correct installation. Parts used in this process: (1) AEC1821 GFCI (115 V, 60 Hz).

REMOVE GFCI

1) Turn off the main electrical power to the unit – place a lockout tag on the circuit breaker panel indicating that the breaker is not to be turned on except by authorized personnel, and disconnect the unit before doing any work on the SUITMATE® unit. Simply turning off a switch in NOT enough.
2) Remove the cover of the weatherproof Junction Box that contains the GFCI. Set the cover and (2) screws aside for reassembly.
3) Remove the GFCI from the weatherproof Junction Box by removing the (2) GFCI mounting screws.

REPLACE GFCI

1) Remove the wires, one at a time, and put each wire in the matching position on the new GFCI. Refer to the SUITMATE® WIRING DIAGRAM on Page 6.
2) Place the newly wired GFCI into the weatherproof Junction Box and secure it.
3) Replace the cover of the weatherproof Junction Box using the (2) screws previously removed.
4) Turn on the main electrical power to the unit and retest to assure proper operation. Refer to TESTING AND OPERATION on page 7.

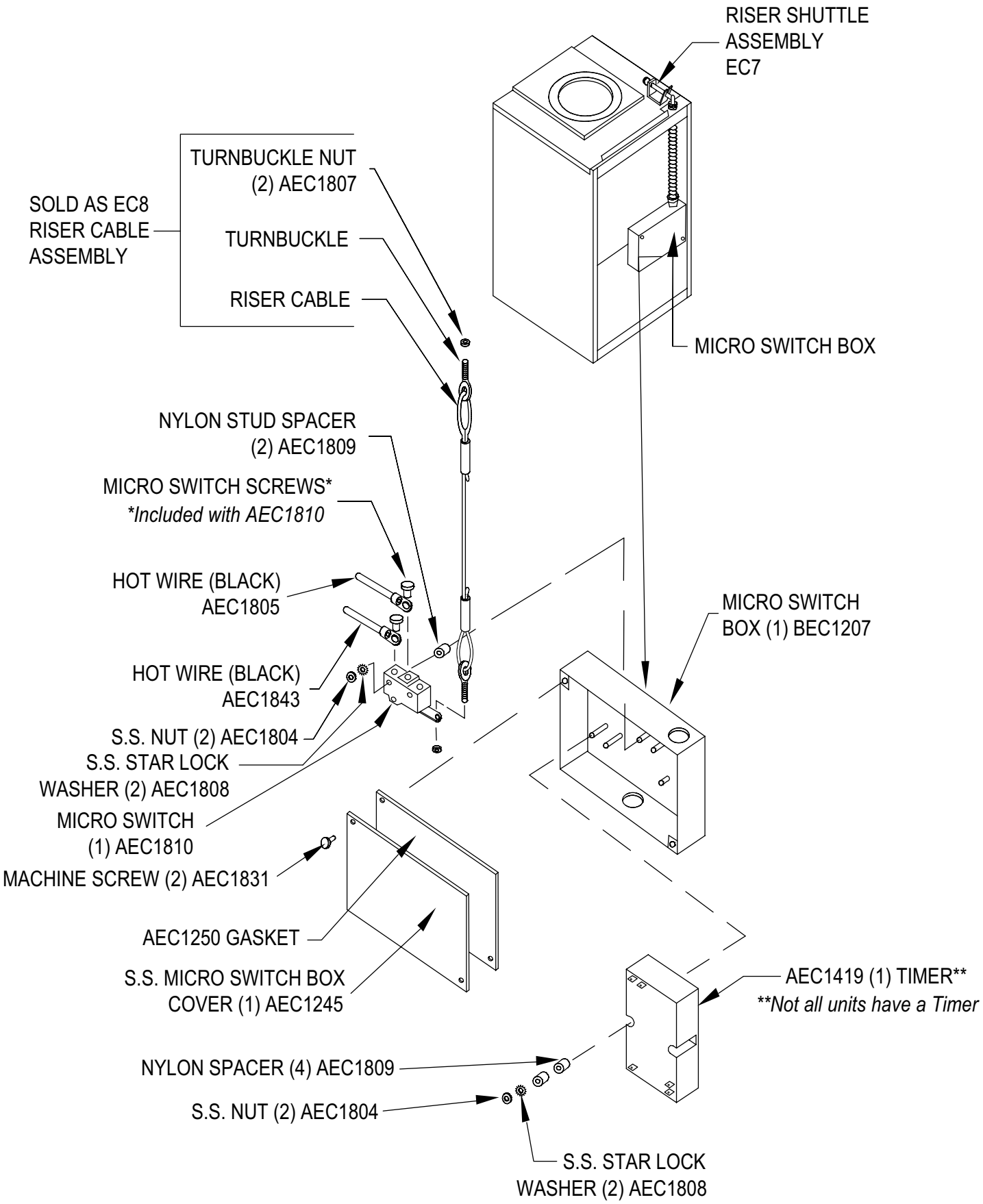
RISER SHUTTLE ASSEMBLY EC7
TURNBUCKLE NUT (2) AEC1807
SOLD AS EC8 RISER CABLE ASSEMBLY
TURNBUCKLE
RISER CABLE
MICRO SWITCH BOX
NYLON STUD SPACER (2) AEC1809
MICRO SWITCH SCREWS*
*Included with AEC1810
HOT WIRE (BLACK) AEC1805
MICRO SWITCH BOX (1) BEC1207
HOT WIRE (BLACK) AEC1843
S.S. NUT (2) AEC1804
S.S. STAR LOCK WASHER (2) AEC1808
MICRO SWITCH (1) AEC1810
MACHINE SCREW (2) AEC1831
AEC1250 GASKET
S.S. MICRO SWITCH BOX COVER (1) AEC1245
AEC1419 (1) TIMER**
**Not all units have a Timer
NYLON SPACER (4) AEC1809
S.S. NUT (2) AEC1804
S.S. STAR LOCK WASHER (2) AEC1808

REMOVE AND REPLACE MICRO SWITCH

Do this FIRST

Make certain you have all the correct parts and fasteners necessary for correct installation. Parts used in this process: (1) AEC1810 Micro Switch, (2) AEC1808 Star Lock Washers, (2) AEC1804 S.S. Nuts, (2) AEC1831 Machine Screws, (1) AEC1250 Gasket, and (1) AEC1245 Micro Switch Box Cover.

REMOVE MICRO SWITCH

1) Turn off the main electrical power to the unit – place a lockout tag on the circuit breaker panel indicating that the breaker is not to be turned on except by authorized personnel and disconnect the unit before doing any work on the SUITMATE® unit. Simply turning off a switch is NOT enough.
2) Remove SUITMATE® unit from the Wall Mount Bracket. See instructions beginning on Page 14. Place the SUITMATE® unit on its front side.
3) Remove the Micro Switch Box Cover to expose the Micro Switch and Riser Cable Assembly by unscrewing (2) screws. Place the screws aside for reassembly.
4) Unscrew the Turnbuckle Nut on the Riser Cable Turnbuckle to free the Micro Switch's arm. Set the nut aside for reassembly.
5) Remove the Nuts and Lock Washers to access the Micro Switch. Set the hardware aside for reassembly.
6) Remove the Micro Switch from the mounting studs.

REPLACE MICRO SWITCH

1) Remove the wires, one at a time, and put each wire in the matching position on the new Micro Switch.
2) Place the newly wired Micro Switch on the mounting studs. Make certain the switch arm extends to the right. Use the Nuts and Lock Washers previously removed to secure the new Micro Switch.

   Note: *Do not over tighten the Nuts!*
3) Put the threaded end of the Riser Cable Turnbuckle through the hole in the arm of the Micro Switch. Use the previously removed Turnbuckle Nut (step 4) to secure the Turnbuckle to the switch arm.
4) Refer to the SUITMATE® UNIT MICRO SWITCH ADJUSTMENT PROCEDURE (Page 47) in this manual to properly adjust the Micro Switch.
5) After the Riser Cable is properly adjusted, replace the Micro Switch Box Cover and secure it in place using the previously removed or replacement screws.

WARNING! ***Make certain the foam seal on the Micro Switch Box Cover is not damaged so that water cannot enter the Micro Switch Box.***

6) Reinstall the SUITMATE® unit to the Wall Mount Bracket. See instructions beginning on Page 14.
7) Turn on the main electrical power to the unit and retest to assure proper operation. Refer to TESTING AND OPERATION on Page 7.

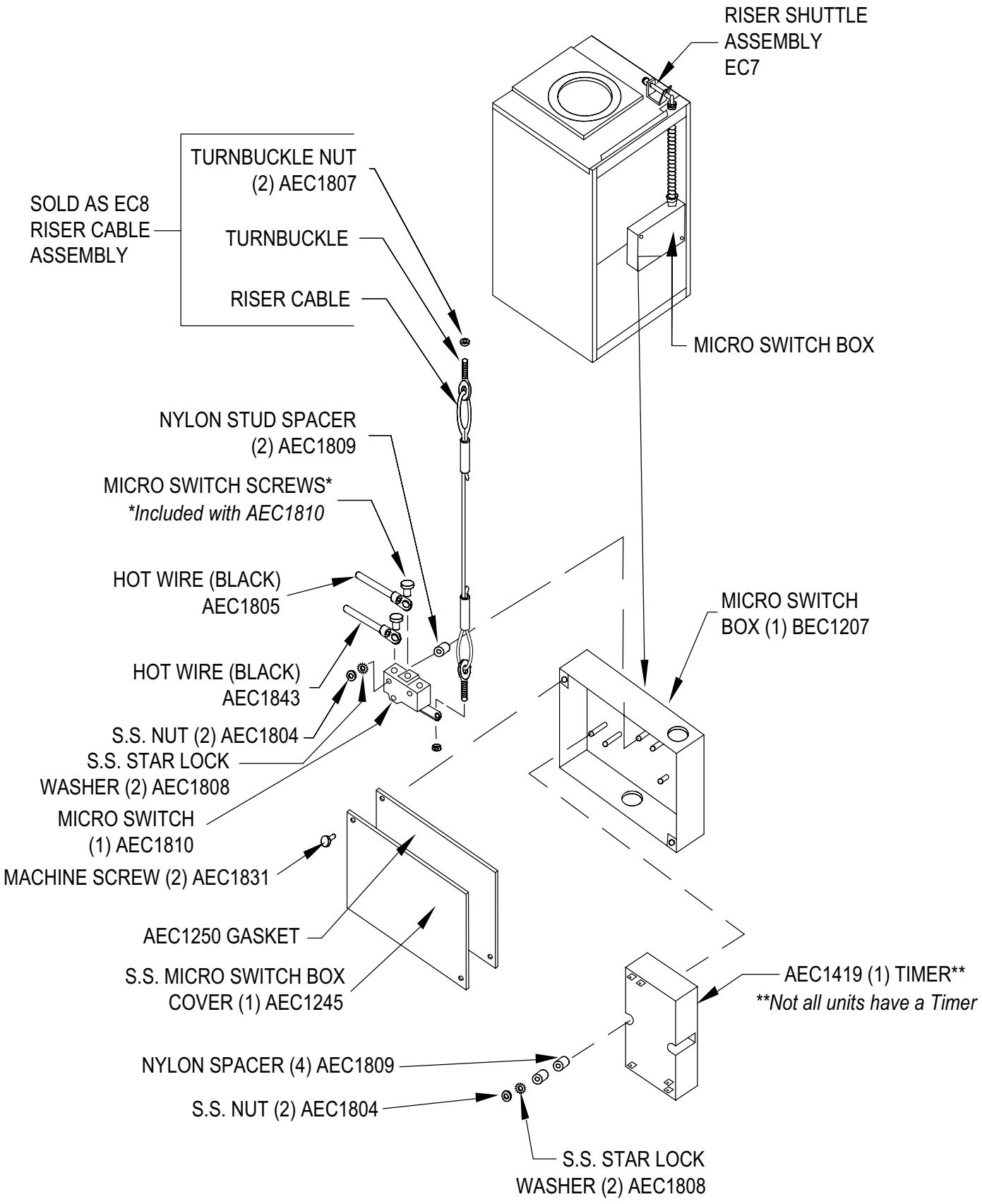

Refer to Wiring Diagram on Page 6 for details

REMOVE AND REPLACE TIMER

Do this FIRST

Make certain you have all the necessary parts and fasteners necessary for correct installation. Parts used in this process: (1) AEC1419 Timer, (4) AEC1809 Nylon Spacers, (2) AEC1808 Star Lock Washers, (2) AEC1804 S.S. Nuts, (2) AEC1831 Machine Screws, (1) AEC1250 Gasket, and (1) AEC1245 Micro Switch Box Cover.

REMOVE TIMER

1) Turn off the main electrical power to the unit – place a lockout tag on the circuit breaker panel indicating that the breaker is not to be turned on except by authorized personnel and disconnect the unit before doing any work on the SUITMATE® unit. Simply turning off a switch is NOT enough.
2) Remove SUITMATE® unit from the Wall Mount Bracket. See instructions beginning on Page 14. Place the SUITMATE® on its front side.
3) Remove the Micro Switch Box Cover to expose the Micro Switch and Riser Cable lower assembly by unscrewing (2) screws. Place the screws aside for reassembly.
4) Remove the (2) Nuts, (2) Lock Washers and (4) Spacers to access the Timer. Set the hardware aside for reassembly.
5) Remove the Timer from the mounting studs.

REPLACE TIMER

1) Remove the wires (see SUITMATE® WIRING DIAGRAM on page 6), one at a time, and put each wire on the appropriate connection on the new Timer.

   Note: *Please verify the style of Timer, and use the correct wiring diagram.*
2) Place the newly wired Timer on the mounting studs. Use the (4) Spacers (2) Nuts, and (2) Lock Washers previously removed to secure the new Timer.

   Note: *Do not over tighten the Nuts!*
3) Replace the Micro Switch Box Cover and secure it in place using the previously removed screws.

WARNING! ***Make certain the foam seal on the Micro Switch Box Cover is not damaged so that water cannot enter the Micro Switch Box.***

4) Reinstall the SUITMATE® unit to the Wall Mount Bracket. See instructions beginning on Page 14.
5) Turn on the main electrical power to the unit and retest to assure proper operation. Refer to TESTING AND OPERATION on Page 7.

HOW TO BYPASS THE TIMER

WARNING! ***Make certain the foam seal on the Micro Switch Box Cover is not damaged so that water cannot enter the Micro Switch Box.***

In troubleshooting the SUITMATE® unit, it is sometimes necessary to bypass the Timer. In this instance, you will first need to remove the unit from the wall as the Timer is located on the back side of the unit.

Please follow the instructions beginning on Page 14 of this manual to remove the SUITMATE® unit from the wall and to disconnect applicable plumbing and electrical fittings.

For testing purposes only, the Timer can be bypassed using the following procedure:

1) The black wire connected to #22 (or #2) on the Timer and the black wire connected to #4 (or COM) on the Timer should be removed off of the Timer and wired together.
2) After connecting the two wires together, restore power to the unit and re-test it. If the issue has been resolved, your Timer needs to be replaced. If the issue remains, please consult the TROUBLESHOOTING GUIDE in this manual for further instruction.

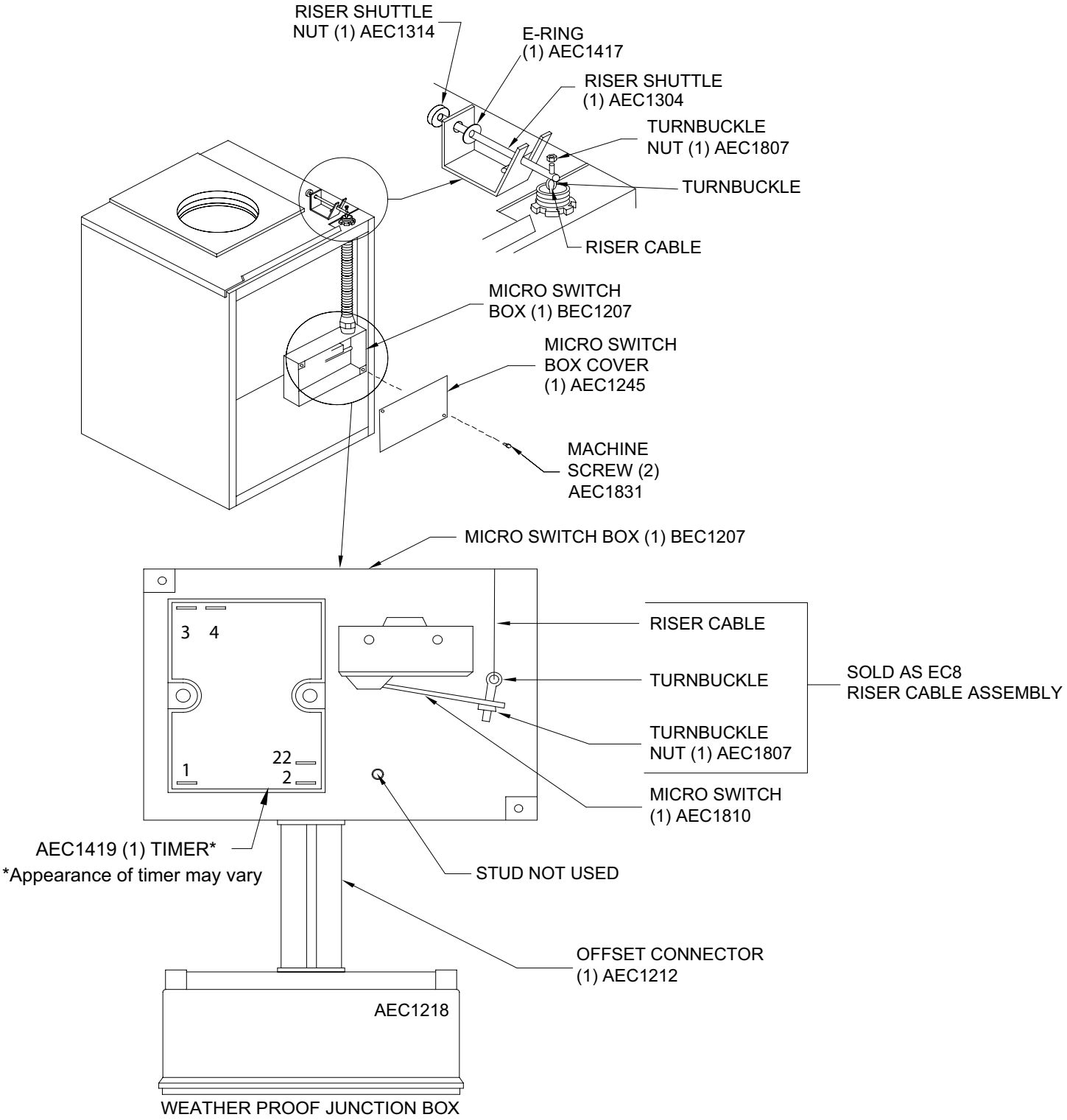
RISER SHUTTLE
NUT (1) AEC1314
E-RING
(1) AEC1417
RISER SHUTTLE
(1) AEC1304
TURNBUCKLE
NUT (1) AEC1807
TURNBUCKLE
RISER CABLE
MICRO SWITCH
BOX (1) BEC1207
MICRO SWITCH
BOX COVER
(1) AEC1245
MACHINE
SCREW (2)
AEC1831
MICRO SWITCH BOX (1) BEC1207
3 4
1
22
2
RISER CABLE
TURNBUCKLE
TURNBUCKLE
NUT (1) AEC1807
SOLD AS EC8
RISER CABLE ASSEMBLY
MICRO SWITCH
(1) AEC1810
AEC1419 (1) TIMER*
*Appearance of timer may vary
STUD NOT USED
OFFSET CONNECTOR
(1) AEC1212
AEC1218
WEATHER PROOF JUNCTION BOX

MICRO SWITCH ADJUSTMENT PROCEDURE

Depress the Lid on the top of the unit and listen for the faint click (activation) of the Micro Switch. If the Micro Switch does not activate or if it activates before the Lid is ¼ inch from being fully depressed, there is probably a problem with the alignment of the Micro Switch. The following procedure will solve the alignment problem. Please consult the illustration (Page 48) showing the back of the SUITMATE® unit to identify the parts that you will need to recognize.

REMOVE SUITMATE® UNIT FROM THE WALL MOUNT BRACKET

1) Turn off the main electrical power to the unit – place a lockout tag on the circuit breaker panel indicating that the breaker is not to be turned on except by authorized personnel and disconnect the unit before doing any work on the SUITMATE® unit. Simply turning off a switch is NOT enough.
2) Remove the SUITMATE® unit from its Wall Mounting. See instructions beginning on Page 14.
3) Place the unit on its front side and remove the Micro Switch Box Cover to expose the Micro Switch and Riser Cable Assembly by unscrewing the (2) Machine Screws. Place the screws aside for reassembly.

   NOTE: *Older units may have rivets instead of screws.*

CAUTION! ***Make certain the main electrical power to the unit is turned off – and locked out – before beginning work on the SUITMATE® unit.***

CHECKING MICRO SWITCH ALIGNMENT

1) Stand the unit upright and reaching from the rear, push the Lid down on the top of the unit to determine if the Riser Cable that runs from the top of the unit to the Micro Switch arm is pulling on the arm. If there is no movement, the Actuator Screw in the top may be broken and will need to be replaced. See the Lid Assembly section on Page 19 of this manual.
2) If the Riser Cable does pull up on the Micro Switch arm, then the alignment can likely be adjusted. First, push the Lid down; the Micro Switch should NOT activate (click) until the Lid is approximately ¼ inch from being totally depressed. Adjust the alignment by tightening (unit will activate sooner) or loosening (unit will activate later) the Turnbuckle Nut on the bottom of the Riser Cable until the proper adjustment is obtained. Provide power to the unit and ensure that it is functioning properly.
3) Disconnect the power to the unit.
4) Replace the Micro Switch Box Cover using the (2) Machine Screws removed in step 3.

REATTACH THE SUITMATE® UNIT TO WALL

1) Reinstall the SUITMATE® unit to the Wall Mount Bracket. See instructions beginning on Page 14.
2) Turn on the main electrical power to the unit and retest to assure proper operation. Refer to TESTING AND OPERATION on Page 7.

If you have further difficulities or want additional information, please contact Extractor Corporation at:
(Toll Free) 800-553-3353, (Telephone) 847-742-3532 or (E-Mail) info@suitmate.com and explain your problem.

EXPLODED VIEW

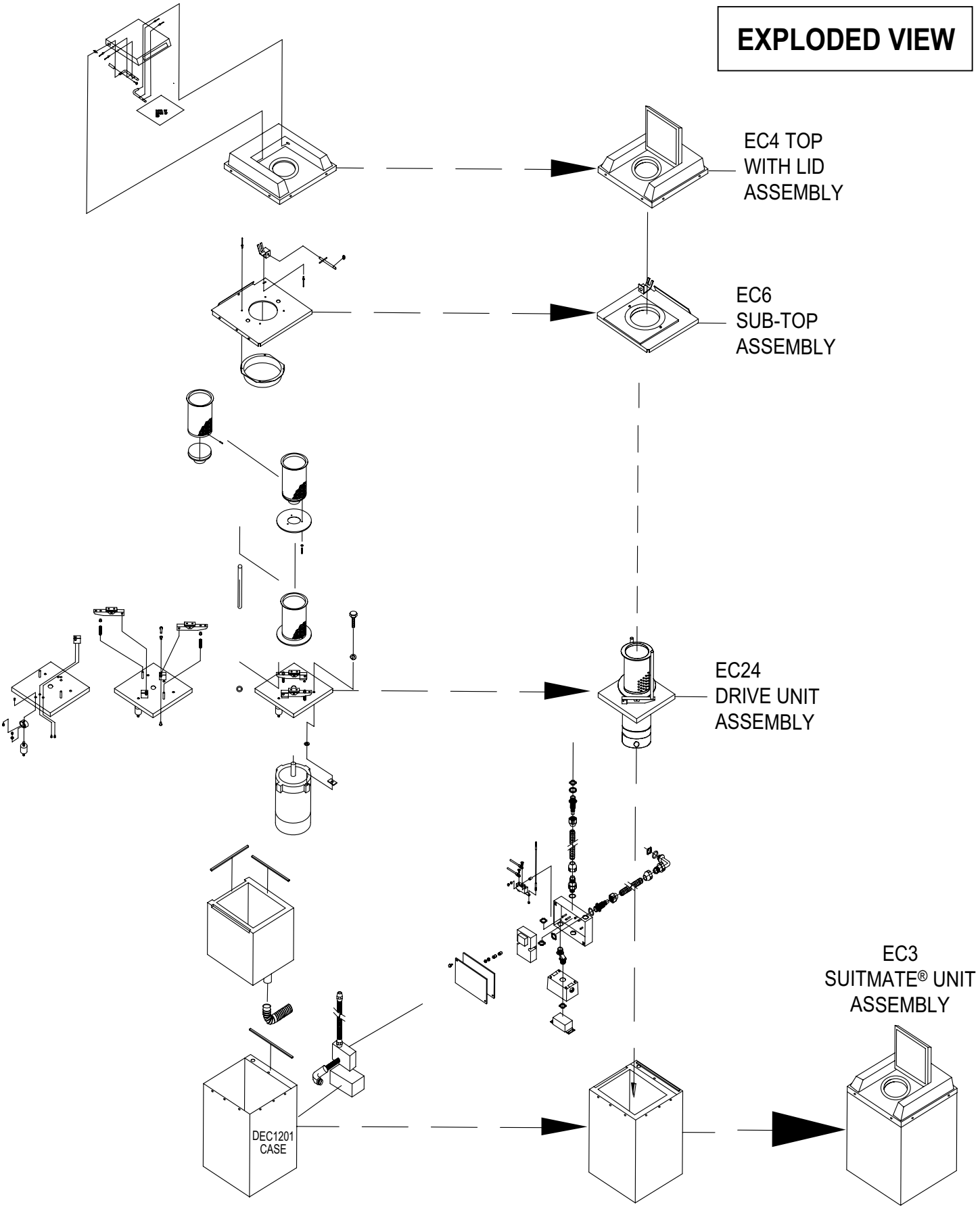

BLOCK DIAGRAM

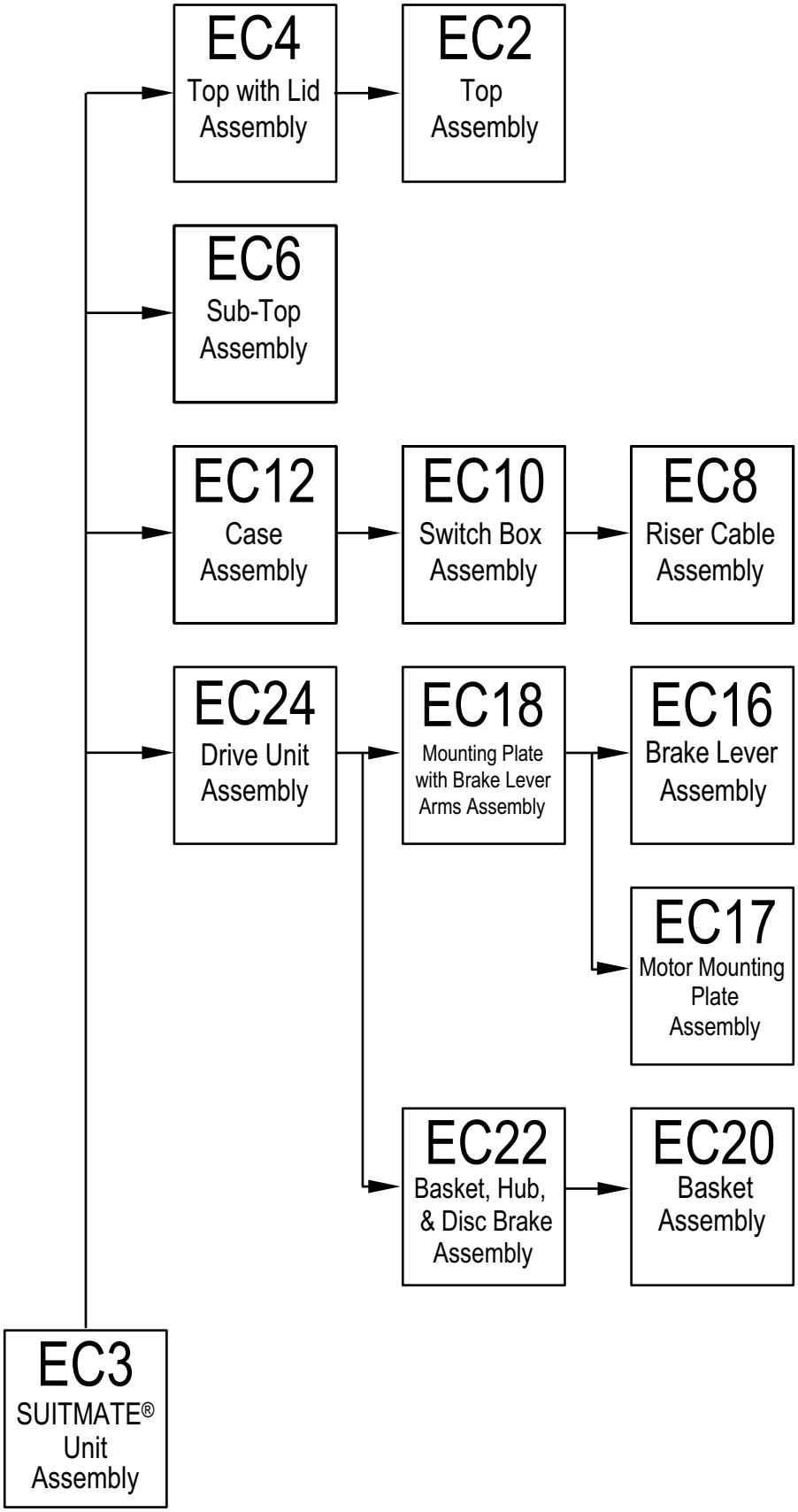

SUITMATE® UNIT PARTS AND ASSEMBLIES LIST

115 V, 60 Hz, 8.6 Amp SUITMATE® Unit

PART NUMBER	DESCRIPTION		QUANTITY
EC2	**TOP ASSEMBLY**		**1**
EC4	**TOP ASSEMBLY WITH LID**		1
EC2	TOP ASSEMBLY		
CEC1402	S.S. LID (includes LID OPERATING INSTRUCTIONS & LIFT LID LABEL)		1
AEC1235	LID OPERATING INSTRUCTIONS (includes LIFT LID LABEL)		1
AEC1234	LIFT LID LABEL - INCLUDED WITH AEC1235 *(not sold separately)*		
AEC1354	RUBBER LID BUMPER		2
BEC1403	S.S. HINGE PIN - LEFT		1
BEC1404	S.S. HINGE PIN - RIGHT		1
AEC1410	S.S. RIVET 1/8 X 3/8		4
AEC1416	BLACK O-RING		2
AEC1405	ACTUATOR SCREW - IN LEFT HINGE PIN	*SOLD*	1
AEC1704	S.S. LOCK WASHER #8	*TOGETHER*	1
AEC1803	ACORN NUT	*IN AEC2040*	1
AEC1404	S.S. ACTUATOR SCREW SLEEVE - COVERS ACTUATOR SCREW		1
AEC1205	BLACK ALUMINUM RIVET		6
EC6	**SUB-TOP ASSEMBLY**		**1**
CEC1301	S.S. SUB-TOP		1
BEC1303	S.S. RISER BRACKET (includes FIBERGLASS TAPE)		1
AEC1305	FIBERGLASS TAPE *(Comes with BEC1303)* - COVERS RISER BRACKET SURFACE		
AEC1208	S.S. RIVET 1/8 X 1/16		3
AEC1824	S.S. SUB-TOP RETAINER RING		1
AEC1208	S.S. RIVET 1/8 X 1/16		4
AEC1352	SUB-TOP GASKET		1
AEC1240	ALUMINUM RIVET 3/16 X 1/8		3
EC7	**RISER SHUTTLE ASSEMBLY**		**1**
AEC1304	S.S. RISER SHUTTLE		1
AEC1314	S.S. RISER SHUTTLE NUT	*SOLD TOGETHER IN AEC2020*	1
AEC1418	SHUTTLE SLIDE PIN		1
AEC1417	S.S. E-RING		1
EC8	**RISER CABLE ASSEMBLY**		**1**
AEC1307	RISER CABLE & SLEEVE		1
AEC1806	TURNBUCKLE	*SOLD AS EC8*	2
AEC1807	TURNBUCKLE NUT	*nut may be sold separately*	2
EC10	**SWITCH BOX ASSEMBLY**		**1**
EC8	RISER CABLE ASSEMBLY		1
BEC1207	S.S. MICRO SWITCH BOX		1
AEC1245	S.S. MICRO SWITCH BOX COVER (includes FOAM GASKET)		1
AEC1250	MICRO SWITCH BOX COVER GASKET (Comes with AEC1245)		1
AEC1810	MICRO SWITCH		1
AEC1809	NYLON STUD SPACER		2

PRICES SUBJECT TO CHANGE WITHOUT NOTICE

SUITMATE® UNIT PARTS AND ASSEMBLIES LIST

115 V, 60 Hz, 8.6 Amp SUITMATE® Unit

PART NUMBER	DESCRIPTION	QUANTITY
EC10	**SWITCH BOX ASSEMBLY -** ***continued***	**1**
AEC1808	S.S. STAR LOCK WASHER 6/32	2
AEC1804	S.S. STUD NUT 6-32	2
AEC1356	CABLE CONDUIT - PLASTIC 8.50"	1
AEC1358	CONDUIT CONNECTOR - PLASTIC	1
AEC1214	LOCKNUT	1
AEC1815	BLACK HOT WIRE - 14.25" W/ RING TERMINAL	1
	MICRO SWITCH SCREW *(Comes with AEC1810)*	2
	MICRO SWITCH STAR LOCK WASHER *(Comes with AEC1810)*	2
AEC1419	SOLID STATE TIMER	1
AEC1804	S.S. STUD NUT 6-32	2
AEC1808	S.S. STAR LOCK WASHER 6/32	2
AEC1809	NYLON STUD SPACER	4
AEC1840	BLACK WIRE - 16.5" W/ INSULATED CONNECTOR	1
AEC1841	WHITE WIRE - 28" W/ INSULATED CONNECTOR	1
AEC1842	BLACK WIRE - 31" W/ INSULATED CONNECTOR	1
AEC1843	BLACK WIRE - 8" W/ INSULATED CONNECTOR	1
AEC1831	MACHINE SCREW 6-32 X 3/8	2

EC12	**CASE ASSEMBLY**	**1**
EC10	SWITCH BOX ASSEMBLY	1
DEC1201	S.S. CASE	1
DEC1213	BLACK PLASTIC LINER	1
AEC1243	FOAM STRIP SEAL (ON BACK TOP OF CASE)	1
AEC1244	FOAM STRIP SEAL (ON TOP OF LINER)	4
AEC1823	S.S. RIVET 5/32 x 1/8	3
AEC1358	CONDUIT CONNECTOR - PLASTIC	1
AEC1214	1/2” LOCKNUT	1

EC16	**BRAKE LEVER ASSEMBLY**		**2**
AEC1602	BRAKE LEVER ARM	*parts not sold separately*	1
AEC1607	BRAKE PAD SUPPORT		1
AEC1608	BRAKE PAD		1
AEC1208	S.S. RIVET 1/8 X 1/16		4

EC17	**MOTOR MOUNTING PLATE ASSEMBLY**		**1**
CEC1501	MOTOR MOUNTING PLATE		1
AEC1512	BRAKE SPRING GUIDE PIN	*SOLD WITH CEC1501*	2
AEC1502	MOTOR SHAFT PROTECTOR	*parts not sold separately*	1
AEC1601	BRAKE SUPPORT BRACKET		2

PRICES SUBJECT TO CHANGE WITHOUT NOTICE

SUITMATE® UNIT PARTS AND ASSEMBLIES LIST

115 V, 60 Hz, 8.6 Amp SUITMATE® Unit

PART NUMBER	DESCRIPTION	QUANTITY
EC17	**MOTOR MOUNTING PLATE ASSEMBLY -** ***continued***	**1**
AEC1823	S.S. RIVET 5/32 X 1/8	4
AEC1223	SHOCK BUMPER RING	3
AEC1228	S.S. FLAT WASHER #10	3
AEC1206	S.S. RIVET 3/16 X 1/4	3
AEC1202	BLACK SHOCK MOUNT	3
AEC1224	S.S. NUT 5/16	3
EC18	**MOUNTING PLATE / BRAKE LEVERS ASSEMBLY**	**1**
EC17	MOTOR MOUNTING PLATE ASSEMBLY	1
EC16	BRAKE LEVER ASSEMBLY	2
AEC1614	BRAKE HINGE PIN	2
AEC1603	WHITE PLASTIC BUSHING	4
AEC1827	NYLON WASHER	4
AEC1823	S.S. RIVET 5/32 X 1/8	2
AEC1612	S.S. COMPRESSION SPRING	2
AEC1609	S.S. FLAT WASHER 1/4	2
AEC1603	WHITE PLASTIC BUSHING	2
EC20	**BASKET AND HUB ASSEMBLY**	**1**
EC22	**BASKET AND BRAKE DISC ASSEMBLY**	**1**
EC20	BASKET ASSEMBLY	1
BEC1702	S.S. BRAKE DISC	1
AEC1703	S.S. PAN HEAD SCREW 8-32 X 1/2	3
AEC1704	S.S. LOCK WASHER #8	3
EC24	**DRIVE UNIT SUB-ASSEMBLY - 115 VOLT / 60 HZ**	**1**
EC18	MOUNTING PLATE / BRAKE LEVERS ASSEMBLY	1
EC22	BASKET AND BRAKE DISC ASSEMBLY	1
BEC1502	MOTOR (115 V, 60 Hz)	1
AEC1504	MOTOR MOUNT SPACER	3
AEC1822	SPECIAL ALUMINUM SPACER	1
AEC1505	S.S. HEX HEAD BOLT 3/8 - 16 X 3/4	4
AEC1203	S.S. SPLIT LOCK WASHER 3/8	4
AEC1506	HUB ROLL PIN	1
AEC1620	THREADED S.S. BRAKE ROD	2
AEC1622	SHORT COMPRESSION SPRING — *SOLD TOGETHER IN AEC2030*	2
AEC1624	S.S. NYLOK LOCKNUT 1/4 - 20	2
EC3	**SUITMATE ASSEMBLY - 115 VOLT / 60 HZ**	
EC12	CASE ASSEMBLY	1
EC24	DRIVE UNIT ASSEMBLY	1
EC6	SUB-TOP ASSEMBLY	1

PRICES SUBJECT TO CHANGE WITHOUT NOTICE

SUITMATE® UNIT PARTS AND ASSEMBLIES LIST

115 V, 60 Hz, 8.6 Amp SUITMATE® Unit

PART NUMBER	DESCRIPTION	QUANTITY
EC3	**SUITMATE ASSEMBLY - 115 VOLT / 60 HZ -** ***continued***	
EC4	TOP ASSEMBLY WITH LID	1
AEC1231	SUITMATE COLOR STRIP	1
AEC1605	RUBBER BRAKE TIP	2
AEC1218	GFCI JUNCTION BOX	1
AEC1220	GFCI JUNCTION BOX HOLE PLUG	1
AEC1247	GFCI JUNCTION BOX COVER	1
AEC1821	FACELESS GFCI	1
AEC1820	GFCI SCREW 6-32 X 3/4 PHILLIPS - *Comes with AEC1821*	2
AEC1233	GFCI JUNCTION BOX LABEL	1
AEC1212	OFFSET CONNECTOR	1
AEC1214	CONDUIT LOCKNUT	2
AEC1357	CABLE CONDUIT - PLASTIC 16.50"	1
AEC1360	CONDUIT CONNECTOR - 90º - PLASTIC	1
AEC1358	CONDUIT CONNECTOR - PLASTIC	1
AEC1214	LOCKNUT	1
AEC1813	NEUTRAL WIRE - WHITE - 34 3/4"	1
AEC2061	GROUND WIRE - GREEN or GREEN/YELLOW - 34 3/4"	1
AEC1830	INSULATED CONNECTOR	2
AEC1819	FLANGE FORK CONNECTOR	2
AEC1224	S.S. NUT - 5/16	3
AEC1238	S.S. SPLIT LOCK WASHER 5/16	3
AEC1248	BLACK DRAIN HOSE	1
AEC1249	S.S. HOSE CLAMP	1
AEC1236	SERIAL NUMBER IDENTIFICATION LABEL	1

	OTHER SUITMATE PARTS AND KITS
AEC1102	S.S. WALL MOUNT BRACKET
AEC1104	INSTALLATION MANUAL
AEC1106	WALL SIGN
AEC2010	SHOCK MOUNT KIT
AEC2020	RISER SHUTTLE KIT
AEC2030	BRAKE ROD KIT
AEC2040	ACTUATOR SCREW KIT
AEC2045	REPLACEMENT SHIPPING BOX KIT
AEC2050	LINER REPLACEMENT KIT
AEC2200	MOTOR PARTS KIT *(MOTOR SOLD SEPARATELY)*
AEC2300	BRAKE PARTS KIT

NOTE: Please contact Extractor Corporation at: (Toll Free) 800-553-3353, (Telephone) 847-742-3532, or (E-mail) info@suitmate.com for any questions related to SUITMATE® parts and components.

PRICES SUBJECT TO CHANGE WITHOUT NOTICE

MAINTENANCE SIGN OFF LOG

Weekly

Physical Inspection

Date	Performed By:	Date	Performed By:	Date	Performed By:	Date	Performed By:	Date	Performed By:

Hygienic Cleaning

Date	Performed By:	Date	Performed By:	Date	Performed By:	Date	Performed By:	Date	Performed By:

Flushing

Date	Performed By:	Date	Performed By:	Date	Performed By:	Date	Performed By:	Date	Performed By:

Monthly

Care of Stainless Steel and Black Plastic

Date	Performed By:	Date	Performed By:	Date	Performed By:	Date	Performed By:	Date	Performed By:

Check the Brake System

Date	Performed By:	Date	Performed By:	Date	Performed By:	Date	Performed By:	Date	Performed By:

Testing the GFCI

Date	Performed By:	Date	Performed By:	Date	Performed By:	Date	Performed By:	Date	Performed By:

Reproduce and post copies of this page as required.

Extractor Corporation
685 Martin Drive
Post Office Box 99
South Elgin, Illinois 60177
USA

Phone: (847) 742-3532
Toll Free: (800) 553-3353
Fax: (847) 742-3552
Email: info@suitmate.com

v062019